WORCESTER

Bosch Group

24CDi/28CDi/35CDi II RSF

WALL MOUNTED COMBINATION BOILER FOR CENTRAL HEATING AND MAINS FED DOMESTIC HOT WATER

INSTALLATION AND SERVICING INSTRUCTIONS

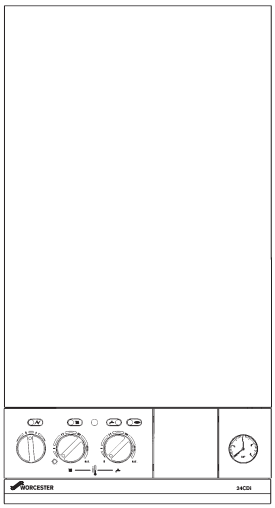

	24CDi	28CDi	35CDi II
GC NUMBER (N.G)	47 311 30	47 311 34	47 311 58
GC NUMBER (L.P.G.)	47 311 31	47 311 35	47 311 59

benchmark™

Worcester Bosch supports the Benchmark code of practice

BOILER OUTPUT

Automatic Modulating Control

	Domestic Hot Water	Central Heating
24CDi	9 - 24kW	9 - 24kW
28CDi	9 - 28kW	9 - 24kW
35CDi II	9.5 - 35.3kW	10.5 - 27.5kW

IMPORTANT: THESE INSTRUCTIONS APPLY IN THE UK ONLY

THESE INSTRUCTIONS ARE TO BE LEFT WITH THE USER OR AT THE GAS METER

This appliance must be installed by a competent person in accordance with the Gas Safety (Installation and Use) Regulations 1998

Contents

1. Installation Regulations

1.1 Gas Safety (Installation & Use) Regulations 1998: It is the law that all gas appliances are installed by a competent person in accordance with the above regulations. Failure to install appliances correctly could lead to prosecution. It is in your interest, and that of safety, to ensure compliance with the law.
1.2 The manufacturers notes must not be taken, in any way, as overriding statutory obligations.
1.3 The compliance with a British Standard or European Norm does not, of itself, confer immunity from legal obligations.
1.4 The installation of the appliance must be in accordance with the relevant requirements of the Gas Safety Regulations, current IEE Regulations, Building Regulations, Building Standards (Scotland) and local water bye-laws.
1.5 The installation should follow the recommendations of the following British Standards unless otherwise indicated:
BS6798 - Specification for the installation of gas fired hot water boilers of rated input not exceeding 60kW (Gross).
BS5449 - Central heating for domestic premises.
BS5546:1 - Installation of gas hot water supplies for domestic purposes.
BS5440/1 - Flues and ventilation for gas appliances of rated input not exceeding 60kW (Gross): Flues.
BS5440/2 - Flues and ventilation for gas appliances of rated input not greater than 60kW (Gross): Air supply.
BS 5482 - Domestic butane and propane gas burning installations - permanent dwellings.
BS6891 - Installation of low pressure gas pipework installations up to 28mm (R1).
BS6700 - Domestic water supply in buildings.
BS7593 - Water treatment in domestic heating systems.
1.6. To ensure that the installation will perform to the highest standards, the system and components should conform to any other relevant standards.
1.7. The appliance and/or components conform, where applicable, with the Essential Requirements of the Gas Appliance Directive, the Boiler Efficiency Directive, the EMC Directive and the Low Voltage Directive.
1.8. In accordance with the requirements of COSSH the appliance does not contain any substances which are harmful to health.
1.9. Product Liability regulations indicate that, in certain circumstances, the installer can be held responsible, not only for mistakes on his part but also for damage resulting from the use of faulty materials. We advise that, to avoid any risk, only quality approved branded fittings are used.
1.10. LPG Installation. The appliance shall not be installed in a room or internal space below ground level when it is intended for use with LPG. This does not preclude the installation into rooms which are basements with respect to one side of the building but open to the ground on the opposite side.
1.11. The advice and instructions given in this document covers, as far as possible, the foreseeable situations which may arise. Contact Worcester Heat Systems Technical Department, Telephone: 08705 266241, for advice on specific installations.

2. General Information

2.1. General Information
2.1.1. The appliance is set to provide the maximum output for domestic hot water and a central heating load of 24kW (24/28CDi) or 27.5kW (35CDi II). The hot water flow rate is limited to a nominal 9 l/min (24CDi) or 10 l/min (28CDi) or 12 l/min (35CDi II) at a maximum temperature rise of 40°C.
2.1.2. The sanitary water section of the appliance is suitable for water mains pressures of up to 10bar.
2.1.3. Conversion kits are available to convert the appliance from Natural Gas to Propane operation and vice versa. The kits include conversion instructions.
2.2 Electrical Supply
Mains supply: 230V ~ 50 Hz. 180Watts.
External fuse: 3A (BS 1362). Internal fuses: T 2A (F1), and T 1.25A (F2).
2.3 Gas Supply
Check the data plate (located on the inner cover of the appliance) to ensure the appliance has been set up for the correct gas supply. The appliance can be set up for either of the following gases: Natural gas (G20) or Propane (G31). **A conversion kit including instructions is available to change the appliance from one gas to the other.**
The boilers require a gas flow in m^3/h of:

	NG (G20)	LPG (G31)
24CDi	2.9	1.13
28CDi	3.3	1.3
35CDi II	4.16	1.6

The meter governor or regulator should deliver a dynamic pressure of 20mbar for natural gas or 37mbar for propane at the appliance, which is about 18.5mb or
35.5 mbar at gas valve inlet pressure test point.
The complete installation, including the gas meter (G20), must be tested for soundness and purged. Refer to BS 6891.
2.4 Packing
The appliance and flue components are packed in separate cartons.
2.5 Installation
The appliance is suitable for indoor installations only.
A wall-spacing frame to allow pipe runs behind the appliance is available.
An inlet water filter is fitted to the mains cold water inlet on the appliance.
The appliance is fitted with a system filling link assembly. See Page 8.
The appliance is suitable for connection to a sealed or open vented primary system **(35CDi II SEALED SYSTEM ONLY)**.
Any specified ventilation openings made into a wall or compartment door must not be obstructed.
If the appliance is to be fitted into a compartment then the compartment must conform to the requirements of BS 5440:2.
Notwithstanding the instructions given in BS 5440:2, this appliance may be fitted in a compartment with no vents as long as the minimum clearances stated in Section 6: Air Supply, are maintained.
Do not place anything on top of the appliance.

The clearances specified for servicing must be maintained. Refer to Fig. 2.

2.6 Flue

The appliance has a multi-directional horizontal fanned flue system.

The standard telescopic flue assembly accommodates flue lengths from 297mm to 725mm.

Extension flue lengths available are from 726mm up to 4000mm (24CDi) or up to 3000mm (28CDi and 35CDi II).

A vertical flue assembly kit is available.

Optional 45° and 90° flue bends are available.

A terminal guard, Type K2, GC 393 553, is available from Tower Flue Components, Vale Rise, Tonbridge,TN9 1TB.

Do not allow the flue terminal fitted to the outside wall to become obstructed or damaged.

A kit for the internal fixing of the flue is available separately.

2.7 Controls

The ON/OFF switch will turn the mains electricity on and off at the appliance.

Note: There is still a live connection to the appliance.

The electronic control system and gas valve modulate the heat input in response to the central heating and domestic hot water temperature settings.

The Central Heating Temperature control knob provides for the selection of domestic hot water only (turned fully anti-clockwise) or central heating and domestic hot water (turned clockwise).

The position of the Domestic Hot Water control knob will determine the temperature of the water delivered to the tap or shower or bath.

A choice of facia mounted programmers are available as optional extras. A remote mounted programmer may be connected to the appliance.

The integral facia displays indicate the status of the appliance.

There is provision for the connection of a mains voltage room thermostat and/or a frost thermostat.

The electronic controls prevent rapid cycling of the appliance in the central heating mode.

2.8 System Notes

IMPORTANT: Check that no dirt is left in the water pipework as this could cause damage to the appliance. Thoroughly flush the heating system and the cold water mains supply in accordance with the recommendations of BS7593: 1992.

Remove all system cleanser before adding any inhibitor.

The water pipe connections throughout a sealed system must be capable of sustaining a pressure of up to 3 bar.

Radiator valves must conform to the requirements of BS 2767:1991.

The relief valve discharge must be directed away from any electrical components or where it would cause a hazard to the user.

A drain cock to BS 2879 must be fitted to the lowest point of the system.

For circuit design purposes it is important that due note is taken of the information given in Table 3 relating to the available pump head.

2.9 Showers, Bidets, Taps and Mixing Valves

Hot and cold taps and mixing valves used in the system must be suitable for operating at the mains pressure.

Thermostatically controlled or pressure equalising shower valves will guard against the flow of water at too high a temperature.

If a pressure equalising valve is used, set the Domestic Hot Water temperature control knob to the 'MAX' position.

Hot and cold mains fed water can be supplied direct to an over-rim flushing bidet subject to local Water Company requirements.

With all mains fed systems the flow of water from the individual taps will vary with the number of outlets operated simultaneously and the cold water mains supply pressure to the property. Flow balancing using 'Ball-o-Fix' type valves is recommended to avoid an excessive reduction in flow to individual outlets. For further information contact Worcester Heat Systems Technical Helpline.

2.10 Safety Considerations

The appliance must not be operated in a waterless condition.

The appliance must not be operated with the boiler inner casing cover removed.

Work must not be carried out on the appliance without the gas and electricity supplies being switched off.

Checks must be made to ensure that, where applicable, the ventilation openings made into walls and partitions are of the correct size and are not obstructed.

IMPORTANT: Where back-flow prevention devices, including water meters, are fitted the expansion of hot water into cold water main can be prevented. This can result in a pressure build-up that may cause damage to the boiler and household devices such as showers, washing machines etc.

In these cases we recommend that a mini-expansion vessel be fitted adjacent to the boiler in the cold water pipe.

2.11 Operation

Domestic Hot Water: With a demand for hot water the burner will light at its maximum setting and then automatically adjust its output to maintain the temperature of the delivered water. When hot water is no longer required, the burner will extinguish. The fan and pump may continue to run for a short period to dissipate the residual heat from the appliance.

Central Heating: With a demand for heating the burner will light at its minimum setting and gradually increase to give the maximum output. The output of the appliance is then automatically adjusted to maintain the temperature of the system. The output can reduce down to its minimum of setting. If the system no longer requires even the minimum output to maintain the desired room temperature the burner will extinguish. The fan and pump may continue to run to dissipate the residual heat from the appliance. The appliance will remain off for a fixed period of three minutes before re-lighting to automatically meet the system requirements.

Domestic Hot Water and Central Heating: The appliance will supply heat to the central heating system as required. A demand for domestic hot water at a tap or shower will override the central heating requirement for the period of the domestic hot water demand. When hot water is no longer required the appliance will return to the central heating state and its normal mode of operation. The fan may continue to run to dissipate the residual heat from the appliance as necessary.

Fig. 1. Appliance water flow diagram.

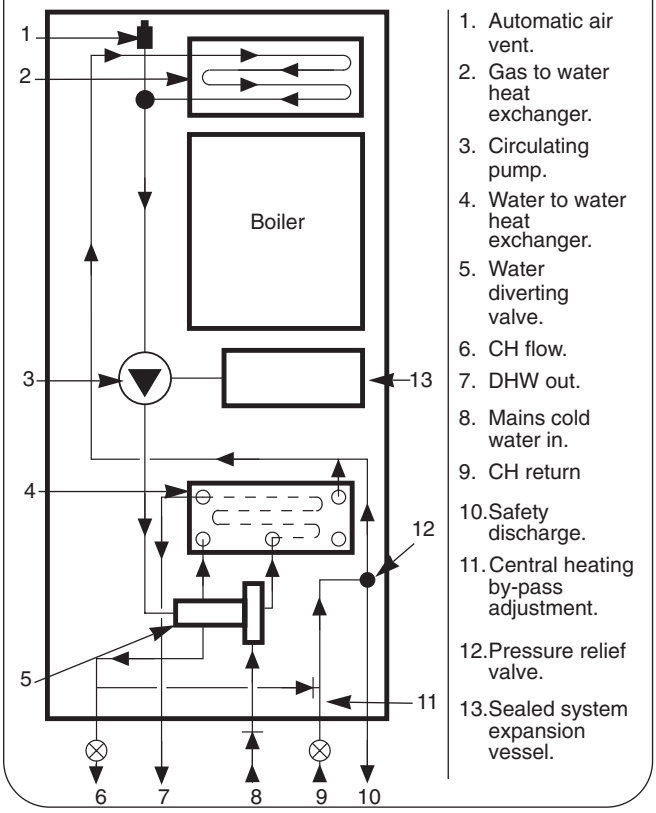

3. Technical Data

Table 1 **Note:** Gross Heat Input x 0.901 (NG) or x 0.922 (propane) = Net Heat Input.

NOMINAL BOILER RATINGS (10 minutes after lighting)		BOILER ADJUSTED FOR G20 (Natural Gas)			BOILER ADJUSTED FOR G31 (Propane)		
		24CDi	28CDi	35CDi II	24CDi	28CDi	35CDi II
MAX. OUTPUT (DHW)	kW	24.0	28.0	35.3	24.0	28.0	35.3
MAX. INPUT (net)	kW	27.0	31.5	39.2	27.0	31.5	39.2
BURNER PRESSURE	mbar	14.8	15.5	13.5	35.5	35.5	34.7
GAS RATE	m^3/h	2.9	3.3	4.15	1.13	1.3	1.6
MAX. OUTPUT (CH)	kW	24.0	24.0	27.5	24.0	24.0	27.5
MAX. INPUT (net)	kW	27.0	27.0	30.1	27.0	27.0	30.1
BURNER PRESSURE	mbar	14.8	10.8	8	35.3	24.3	21.3
GAS RATE	m^3/h	2.9	2.9	3.19	1.13	1.3	1.23
MIN. OUTPUT (DHW)	kW	9.0	9.0	9.5	9.0	9.0	9.5
MIN. INPUT (net)	kW	11.4	11.4	11.9	11.4	11.4	11.9
BURNER PRESSURE	mbar	1.5	1.0	0.9	5.4	3.8	3.1
GAS RATE	m^3/h	1.2	1.2	1.26	0.46	0.5	0.49

Table 2.

FLUE DETAILS			
HORIZONTAL FLUE			**mm**
WALL HOLE DIAMETER		EXTERNAL FIX	110
		INTERNAL FIX	150
STANDARD FLUE (From flue outlet centre)		MIN UNCUT LENGTH	425
		MAXIMUM LENGTH	725
EXTENDED FLUE	MAXIMUM LENGTH	24CDi	4000
		28CDi and 35CDi II	3000
FLUE ASSEMBLY DIAMETER			100

Table 3

PUMP HEAD				
BOILER OUTPUT	HEAD	MIN. FLOW RATE		FLOW/ RETURN DIFFERENTIAL °C
kW	Metres	L/min.		
9.0	4.2	11.7		11°C
24.0	2.0	24CDi	20.5	12.5°C
		28CDi	28.5	12°C
27.5	1.9	35CDi II	28.5	12°C

Table 4

MECHANICAL SPECIFICATIONS		
CENTRAL HEATING FLOW - COMPRESSION	22mm	
CENTRAL HEATING RETURN - COMPRESSION	22mm	
COLD WATER INLET - COMPRESSION	15mm	
DOMESTIC HOT WATER FLOW - COMPRESSION	15mm	
GAS INLET	Rp ¾	
RELIEF VALVE DISCHARGE	15mm Copper Tube	
	24/28CDi	35CDi II
CASING HEIGHT	850mm	850mm
CASING WIDTH	450mm	500mm
CASING DEPTH	360mm	370mm
WEIGHT - DRY	45kg	49kg
WEIGHT - MAXIMUM INSTALLATION	42kg	46kg
WEIGHT - PACKAGED	48kg	53kg

Table 5

PERFORMANCE SPECIFICATIONS				
PRIMARY WATER CAPACITY		2.0 litres		
MAXIMUM MAINS INLET PRESSURE		10 bar		
MINIMUM MAINS INLET PRESSURE (working) for max. hot water flow		1.2 bar		
MINIMUM MAINS INLET PRESSURE (working) to operate appliance		0.7 bar		
MAXIMUM CENTRAL HEATING FLOW TEMPERATURE		82°C nom		
MAXIMUM CENTRAL HEATING SYSTEM SET PRESSURE		1.5 bar		
DOMESTIC HOT WATER TEMPERATURE RANGE		50 - 62°C		
		24CDi	28CDi	35CDi II
OUTPUT TO DOMESTIC HOT WATER	NATURAL GAS (G20)	9.0 - 24 kw	9.0 - 28kw	9.5 - 35.3kw
	LPG - PROPANE (G31)	9.0 - 24 kw	9.0 - 28kw	9.5 - 35.3kw
OUTPUT TO CENTRAL HEATING	NATURAL GAS (G20)	9.0 - 24 kw	9.0 - 24kw	10.5 - 27.5kw
	LPG - PROPANE (G31)	9.0 - 24 kw	9.0 - 24kw	10.5 - 27.5kw
DOMESTIC HOT WATER SPECIFIC RATE AT 30° RISE		11.8 l/min	13.5 l/min	16.8 l/min
MAXIMUM DOMESTIC HOT WATER FLOW RATE FROM APPLIANCE AT 40° RISE		9.0 l/min	10 l/min	12 l/min
NOx CLASSIFICATION		Class 2		
SEDBUK*	NATURAL GAS	78.1% D	78.9% D	78.5% D
SEDBUK*	LPG - PROPANE	81% D	80.7% D	80.8% D

*The value is used in the UK Government Standard Assesment Proceedure (SAP) for the energy rating of dwellings. The test data from which it has been calculated have been certified by the Gastec notified body.

Table 6a (24CDi)

DOMESTIC HOT WATER - TEMPERATURE RISE				
DISCHARGE RATE l/min	7	8	9	10
TEMPERATURE RISE °C	49	42.9	38.1	34.3

Table 6b (28CDi)

DOMESTIC HOT WATER - TEMPERATURE RISE				
DISCHARGE RATE l/min	7	8	9	10
TEMPERATURE RISE °C	57.3	50.2	44.6	40.1

Table 6c (35CDi II)

DOMESTIC HOT WATER - TEMPERATURE RISE				
DISCHARGE RATE l/min	9	10	11	12
TEMPERATURE RISE °C	57.3	50.2	44.6	40.1

Table 7

GAS SUPPLY SYSTEM - BASED ON NG (G20)			
TOTAL LENGTH OF GAS SUPPLY PIPE meters			
3	6	9	
GAS DISCHARGE RATE m3/h			PIPE DIAMETER mm
8.7	5.8	4.6	22
18.0	12.0	9.4	28

Table 8

CLEARANCES (mm)		
	INSTALLATION	SERVICE
ABOVE APPLIANCE FLUE ELBOW	30	30
IN FRONT OF APPLIANCE	600	600
BENEATH APPLIANCE	200	200
RIGHT AND LEFT HAND SIDE	10	10

Table 9

SYSTEM CAPACITY WITH A 10 LITRE VESSEL			
TOTAL SYSTEM VOLUME litres			
INITIAL PRESSURE bar	INITIAL CHARGE PRESSURE bar		
	0.5	1.0	1.5
1.0	72	92	n/a
1.5	39	53	64

4. Siting The Appliance

4.1 The appliance may be installed in any room although particular attention is drawn to the requirements of the current I.E.E. Wiring Regulations BS 7671 and, in Scotland, the electrical provisions of the Building Regulations applicable in Scotland, with respect to the installation of appliances in rooms containing baths or showers.

Where a room sealed appliance is installed in a room containing a bath or shower, any electrical switch or appliance control using mains electricity must not be able to be touched by a person using the bath or shower.

4.2 The appliance is not suitable for external installation.

4.3 The appliance does not require any special wall protection.

4.4 The wall must be capable of supporting the weight of the appliance. See Table 4.

4.5 The specified clearances must be available for installation and for servicing. See Fig. 2. and Table 8.

4.6 The appliance can be installed in a cupboard used for airing clothes provided that the requirements of BS 6798 and BS 5440:2 are maintained.

Notwithstanding the instructions given in BS 5440:2, this appliance may be fitted in a compartment with no vents as long as the minimum clearances stated in Section 6: Air Supply, are maintained.

4.7 An airing space must be separated from the boiler space by a perforated non-combustible partition. Expanded metal or rigid wire mesh are acceptable provided that the major dimension is less than 13mm. See BS 6798.

4.8 The distance between the inner face of a cupboard door and the cabinet front should not be less than 75mm.

Fig. 2. Appliance casing dimensions and required clearances.

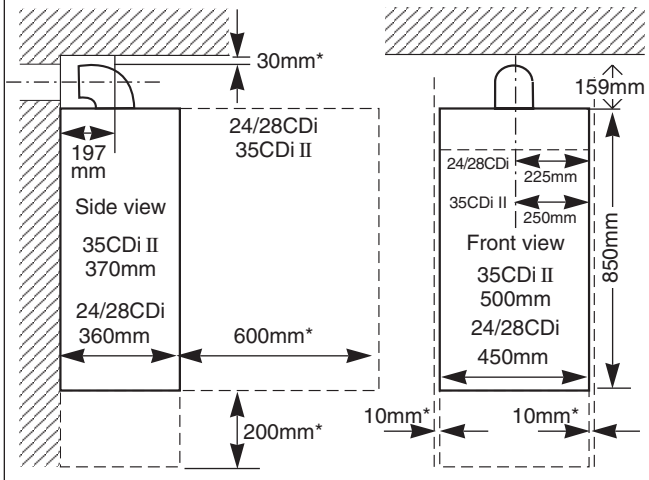

* Space required for installation and servicing

4.9 The pipe connection positions on the manifold are shown in Fig.3 allowing the system to be pre-piped and flushed before the appliance is fitted. Always consider the possible need to disconnect the pipes from the appliance after installation.

4.10 LPG Installation: The appliance shall not be installed in a room or internal space below ground level when it is intended for use with LPG. This does not preclude the installation into rooms which are basements with respect to one side of the building but open to ground level on the opposite side.

Fig. 3. Appliance pipework connections

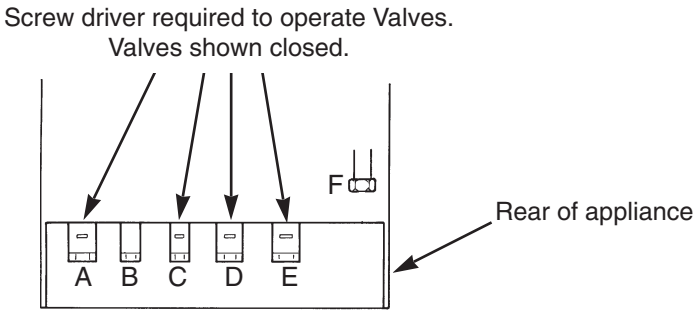

			24/28	35
A	CH Flow	=	62.5	87.5
B	DHW Out	=	127.5	152.5
C	Mains Cold Water In	=	192.5	217.5
D	Gas Inlet	=	257.5	282.5
E	CH Return	=	322.5	347.5
F	Safety Relief	=	382.5	407.5

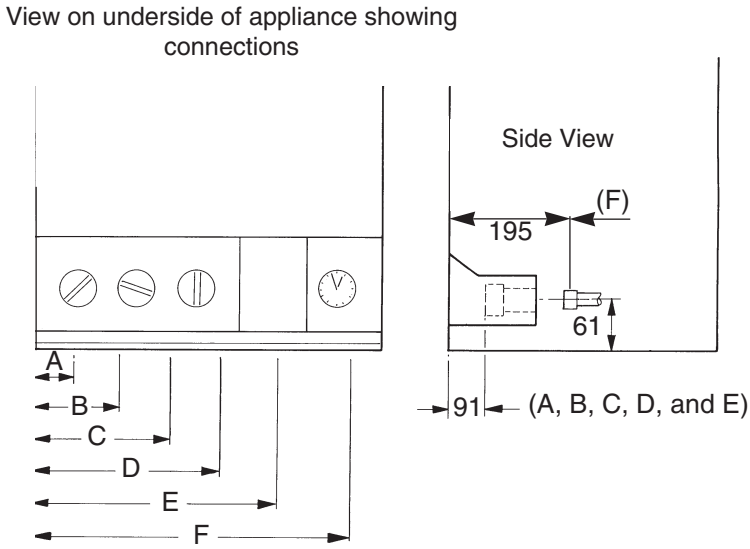

5. Siting The Flue Terminal

The flue system must be installed following the requirements of BS5440:1.
The standard uncut flue kit length is 425 - 725mm. Extension kits for flues up to 4m (24CDi), 3m (28CDi and 35CDi II) are available.
The terminal must not cause an obstruction nor the combustion products a nuisance.
A minimum of 75mm must be achieved where the terminal is near fusible or combustable materials such as a plastic drain pipe or guttering or carport roof UNLESS suitable heat shields are provided.
If the terminal is less than 2m above a surface to which people have access then a guard must be fitted. The guard must be evenly spaced about the terminal and fixed with plated screws. A guard Type K2 can be obtained from Tower Flue Components, Vale Rise, Tonbridge, TN9 1TB.
It is essential that products of combustion cannot re-enter the building. Refer to Fig 4.

6. Air Supply

6.1 The appliance does not require a separate vent for combustion air.
6.2 The appliance can be fitted in a cupboard or compartment with no vents for cooling but the minimum clearances must be increased to those given below. (**Note:** The clearance at the front is to removable panel, e.g. a door).

Above the flue turret	30mm
In front	250mm
Below	200mm
Right-hand side	75mm
Left-hand side	75mm

6.3 If the appliance is to be fitted in a cupboard or compartment with less clearance than those in the table above (minimum clearances are given in Section 4. Siting The Appliance) then permanent air vents for cooling are required. One at high level and one at low level, either direct to outside air or to a room. Both vents must pass to the same room or be on the same wall to the outside air.
6.4 The minimum free areas required are given below.

POSITION OF AIR VENTS	AIR FROM THE ROOM			AIR DIRECT FROM OUTSIDE		
	24CDi	28CDi	35CDi II	24CDi	28CDi	35CDi II
HIGH LEVEL	270 cm^2	315 cm^2	393 cm^2	135 cm^2	158 cm^2	197 cm^2
LOW LEVEL	270 cm^2	315 cm^2	393 cm^2	135 cm^2	158 cm^2	197 cm^2

6.5 Refer to BS 6798 and BS 5440:2 for additional information.

Fig. 4. Siting of the flue terminal.

TERMINAL POSITION	MIN. DISTANCE
A– Directly below an openable window or other opening e.g. air brick.	300 mm
B– Below gutters, soil pipes or drain pipes.	75 mm
C– Below eaves.	25 mm
D– Below balconies or car port roof.	25 mm
E– From vertical drain pipes and soil pipes.	25 mm
F– From internal or external corners.	25 mm
G– Above ground, roof or balcony level.	300 mm
H– From a surface facing a terminal.	600 mm
I– From a terminal facing a terminal	1200 mm
J– From an opening in a car port (e.g. door window) into dwelling.	1200 mm
K– Vertically from a terminal on the same wall.	1500 mm
L– Horizontally from a terminal on the same wall.	300 mm
M– From door, window or air vent .	300 mm

Advice should be taken if the terminal is in close proximity to surfaces which may bo of plastic materials i.e. car-ports, gutters etc.

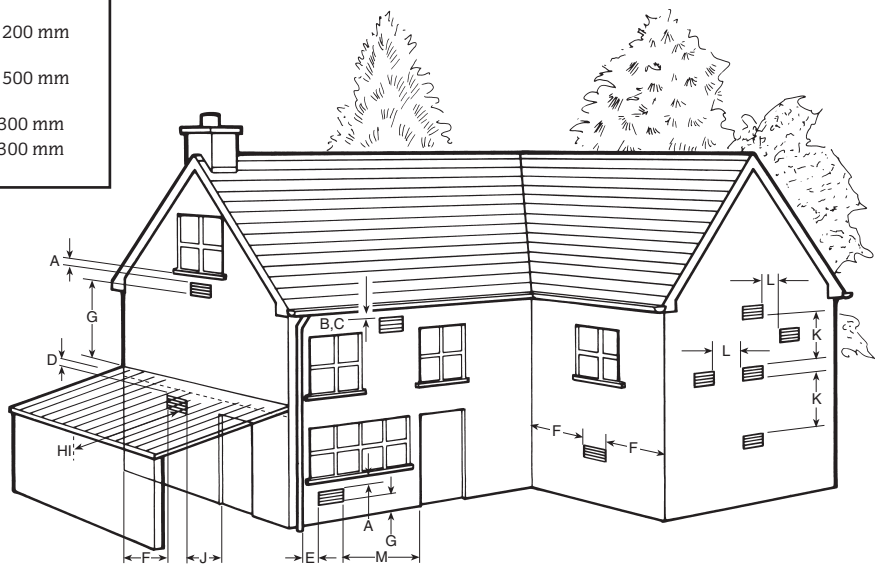

7. Sealed Primary Systems

See Figs. 5, 6 and 6a

7.1 The system must comply with the requirements of BS 6798 and BS 5449.

7.2 The appliance must not be operated without the system being full of water, properly vented and pressurised.

7.3 The pressure relief valve operates at 3 bar (45lb/in^2). The discharge must be directed away from electrical components or where it might be a hazard to the user.

7.4 The pressure gauge indicates the system pressure which must be maintained.

7.5 The 10 litre expansion vessel is charged to 0.5 bar and is suitable for a static head of 5 metres (17.5ft). The pressure can be increased if the static head is greater than 5 metres (17.5ft).

7.6 With an initial system pressure of 0.5 bar, a system capacity of about 72 litres can be accommodated. Refer to BS 7074 for more information. The charge pressure can be increased but with a decrease in system volume.

7.7 The appliance includes a system filling link.

7.8 Water loss must be replaced.

7.9 Repeated venting loses water from the system. It is essential that this water is replaced and the system pressure maintained. Refer to Section 13 Commissioning.

7.10 Connections to the mains water supply must not be made without the authority of the local Water Company.

7.11 The pump is set at maximum and must not be adjusted.

7.12 Connections in the system must resist a pressure of up to 3bar.

7.13 Radiator valves must conform to BS2767:10.

7.14 Other valves used should conform to the requirements of BS1010.

7.15 No special system inhibitor is needed.

8. Gas Supply

8.1 The boilers require a gas flow in m^3/h of:

	NG (G20)	LPG (G31)
24CDi	2.9	1.13
28CDi	3.3	1.3
35CDi II	4.16	1.6

Check that the supply system can accommodate this together with any other appliances connected to it. Refer to Table 7.

8.2 A natural gas appliance must be connected to a governed meter.

8.3 There must be a pressure of 20mbar (G20) or 37mbar (G31) at the inlet to the appliance. This is equivalent to a pressure of 18.5 - 19.0mbar (G20) or 35 - 35.5mbar (G31) at the inlet pressure tapping on the gas valve.

Fig. 5. Sealed primary water system.

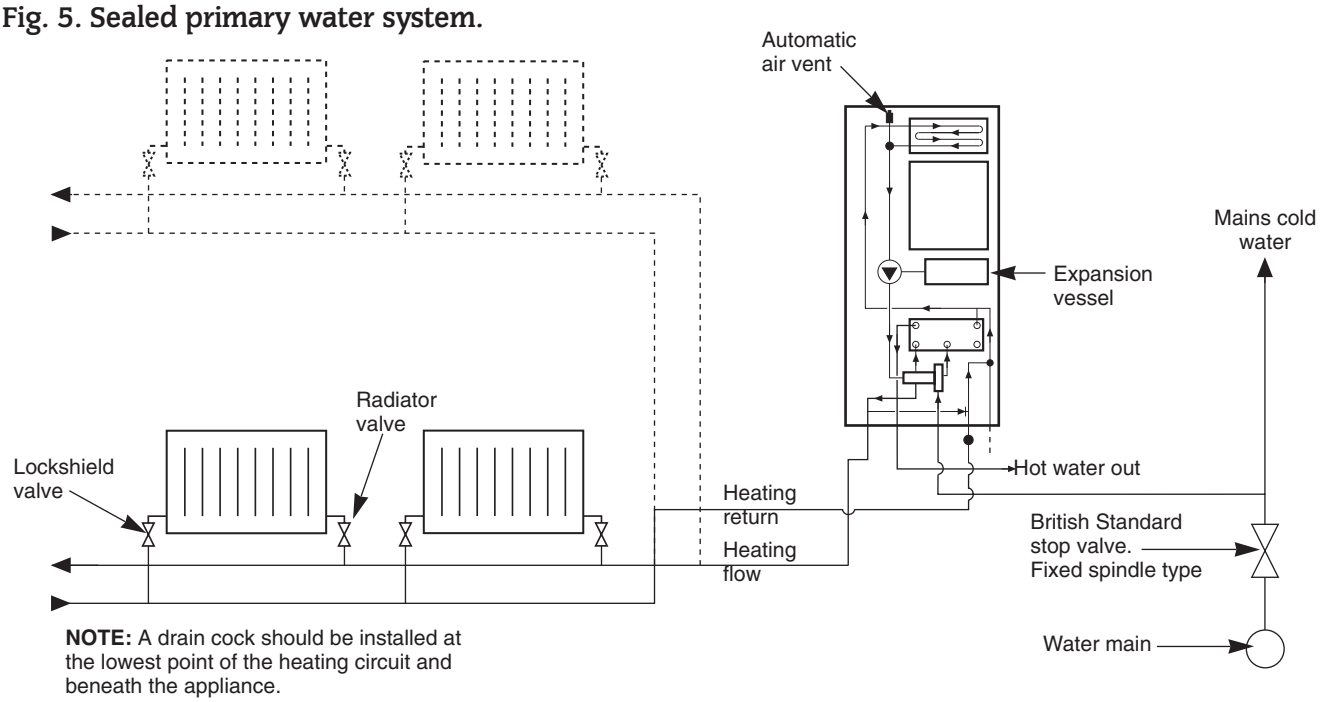

Fig. 6. Filling Loop.

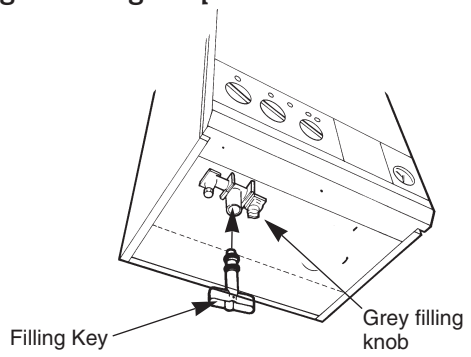

Fig. 6a. Filling Key inserted for filling.

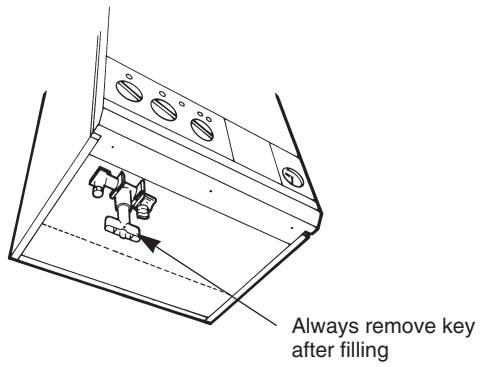

9. Open Vent Primary Systems

9.1 The size of the flow and return pipework is given in Section 3 – Table 4. The components required to connect the appliance to an open vent system are available as an optional extra kit.

9.2 The feed and expansion cistern should be arranged so that there is a minimum static head of 0.3 metres (12 inches) above the top of the appliance or above the highest point in the heating circuit, whichever is the higher. See Fig. 7

9.3 The feed and vent pipe should be 22mm diameter and rise continuously from the appliance to the feed and expansion cistern.

9.4 A pressure relief valve is not required on an open vented system.

9.5 Air within the appliance will be expelled via the feed and vent connection or dissipated into the rest of the system which must be fitted with manual air vents at any high point.

9.6 The pump is set to maximum and must not be reset.

9.7 If it is required to use the appliance for domestic hot water before the central heating circuit is connected, a 22mm copper by-pass must be connected between the central heating flow and return. Refer to Section 12 and Fig. 7.

N.B: 35CDi II IS NOT SUITABLE FOR OPEN VENT SYSTEMS.

Fig. 7. Open vent water system.

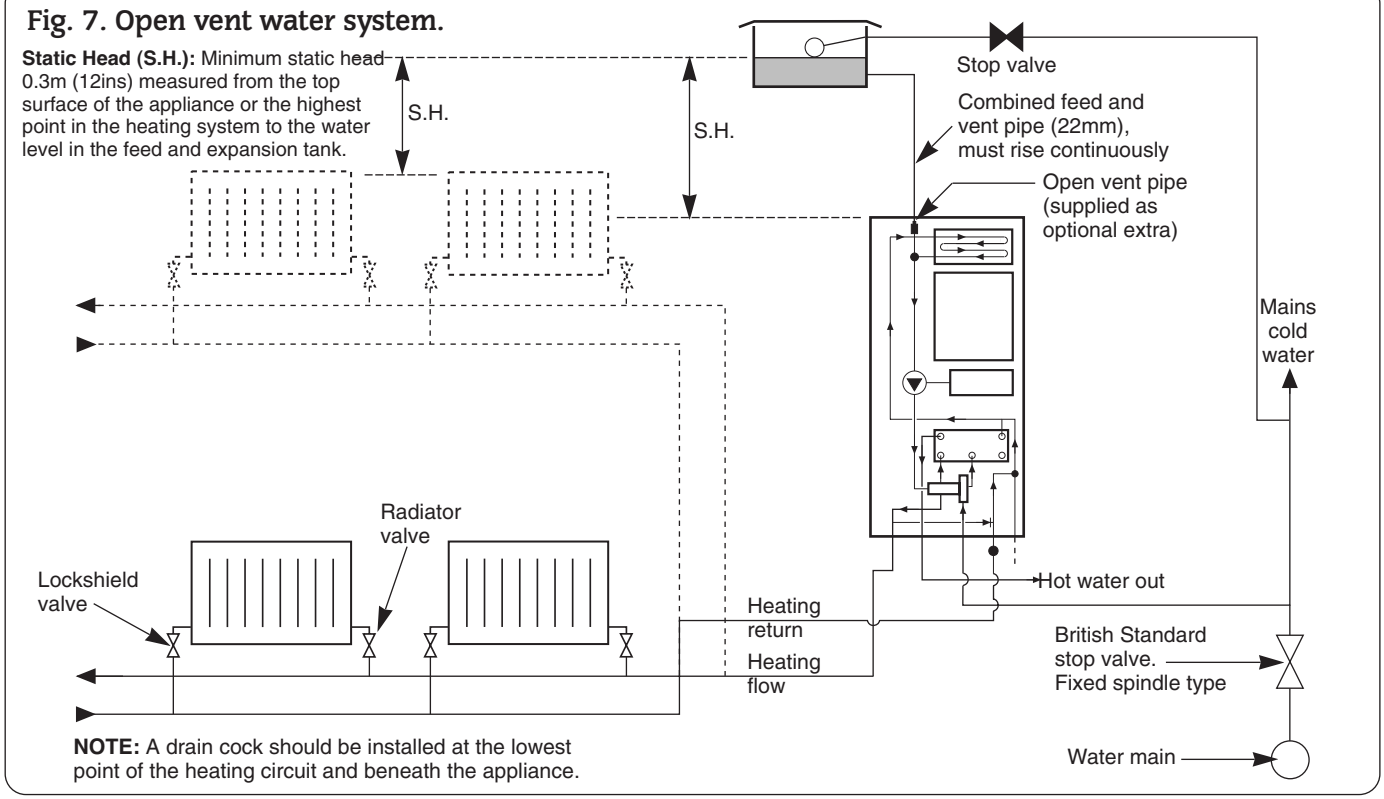

10. Domestic Hot Water

10.1 The following are general requirements and, if necessary, reference should be made to the local Water Company before fitting the appliance.

10.2 MAINS COLD WATER INLET. Devices capable of preventing the flow of expansion water must not be fitted unless separate arrangements have been made. An expansion vessel connection point is provided within the appliance. An Rc1/8" connection is provided. A mini expansion vessel kit is available from Worcester Heat Systems Ltd. A thread sealant compatible with potable water must be used. Refer to Section 2.9.

10.3 The final 600mm of the mains cold water connection to the appliance should be made in copper tube only.

10.4 The appliance is suitable for a mains pressure of up to 10 bar.

10.5 The appliance is fitted with a mains supply isolating valve.

10.6 The maximum domestic hot water flow rate is 9.0 litres/min (±15%) 24CDi or 10.0 litres/min (±15%) 28CDi or 12.0 litres/min (±10%) 35CDi II.

10.7 In winter (when the mains inlet water temperature is lower) a reduced flow rate at the taps may be required to achieve the hot water delivery temperature available in warmer weather.

10.8 It is suggested that long pipe runs to the taps or shower should be insulated to prevent the rapid cooling of domestic hot water after a tap or shower has been turned off.

10.9 Hot and cold taps and mixing valves used with this appliance must be suitable for operating at mains pressure and temperatures of 65°C.

10.10 No anti-syphonage arrangements are necessary except for some loose head showers. See Clause 12.

10.11 Thermostatically controlled or pressure equalising shower valves will guard against the flow of water at too high a temperature.

10.12 The head of a loose head shower must not fall closer than 25mm (1in) above the top edge of the bath to prevent its immersion in bath water. Alternatively the shower must be fitted with an anti-syphonage device at the point of the flexible hose connections.

10.13 The supply of hot and cold mains water direct to a bidet is permitted, subject to local Water Company requirements, provided that the bidet is of the over-rim flushing type. The outlet(s) should be shrouded and unable to have any temporary hand held spray attached. No anti-syphonage arrangements are necessary.

10.14 As the maximum temperature of the Water to Water heat exchanger is limited by the control circuit, there is normally no need for water treatment to prevent scale accumulation. In exceptional circumstances a device to prevent scale formation can be fitted.

Installation of a scale inhibitor assembly should be in accordance with the requirements of the local Water Company. An isolating valve should be fitted to allow servicing. The water hardness can be determined using a standard test paper or by reference to the local Water Company.

11. Electrical

11.1. Mains supply : 230V ~ 50Hz, 180watts. External fuse 3A, Internal fuses F1 - 2A, F2 - 1.25A (20mm). Spare internal fuses are supplied with the appliance. Refer to Fig 14.

11.2. The appliance must be earthed. It must be possible to completely isolate the appliance.

11.3. The mains cable must be 0.75mm2 (24x0.20 mm) to BS6500-Table 15 or 16.

11.4 The mains cable must be connected to the terminal ST12 marked L (red or brown lead), N (black or blue lead) and the Earth stud (green or green/yellow lead) and secured with the cable clamp. Check that sufficient loose lead has been left to allow access to the control box. The Earth lead must be still be slack when the other leads are taut. Refer to Fig 8.

11.5. The connection to the mains must be either: A 3A fused three-pin plug and unswitched socket outlet, both complying with BS1363 or a double pole isolator with a contact separation of 3mm in all poles and supplying the appliance and controls only.

11.6. Access to the mains connection on the driver board is gained by removing the bottom cover from the facia. Refer to Fig 12.

11.7. A room thermostat or an externally mounted programmer must be suitable for mains voltage operation and the leads securely fixed in the clamps provided. The controls must be earthed at the connection on the control board. Refer to Fig 11 and 13.

11.8. A choice of programmers, to fit into the facia, are available to control the CH. Full instructions are sent with the programmer. Refer to Fig 15.

11.9. On very rare occasions an external frost thermostat might be considered where parts of the system are remote from the appliance. Refer to Worcester Heat Systems Technical Department for more information - Tel: 08705 266241.

11.10. A radio frequency room thermostat is available for use with the appliance.

11.11. **Safety Check**: If there is an electrical fault after installation check for fuse failure, short circuits, incorrect polarity of connections, earth continuity or resistance to earth.

Fig. 8. Mains electricity connections.

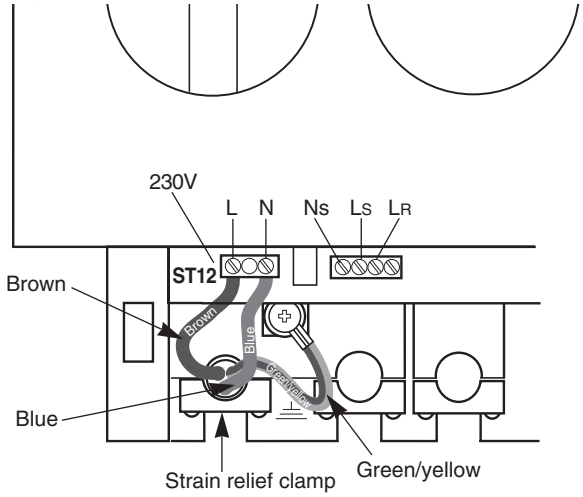

Fig. 9. Wiring diagram.

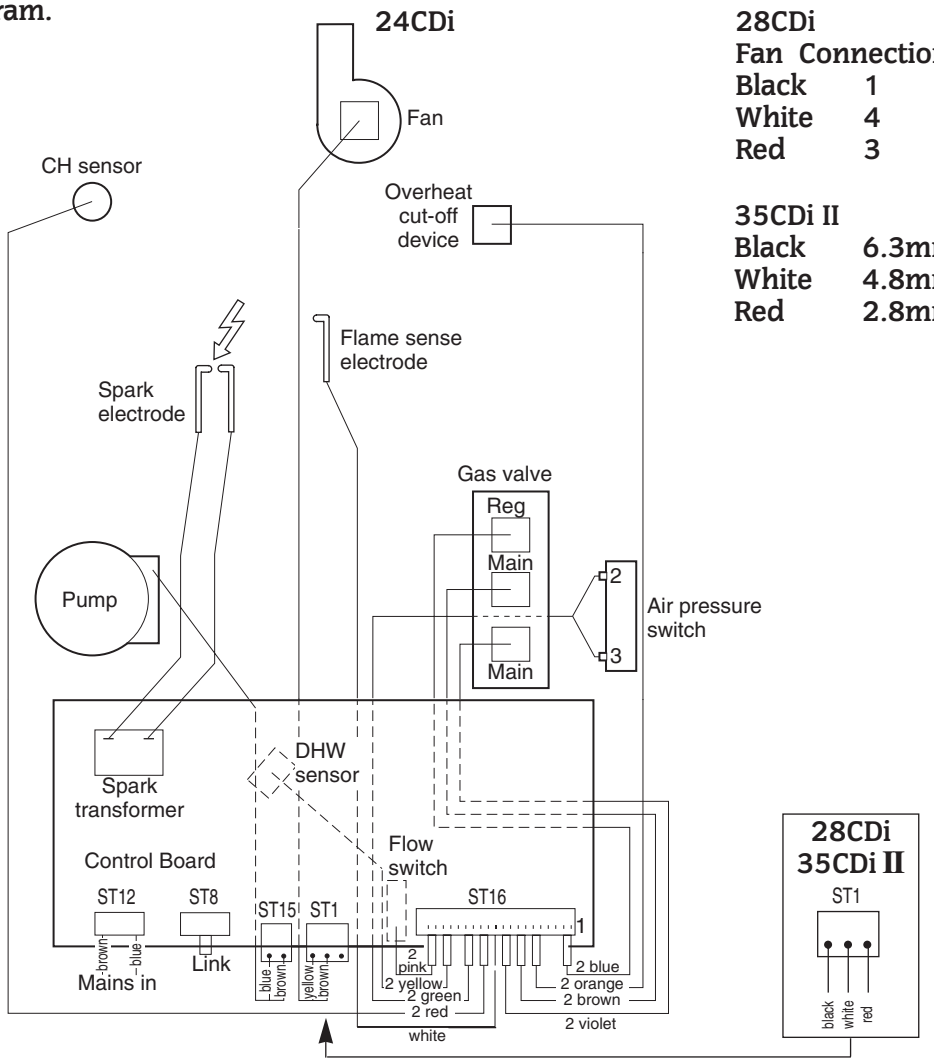

28CDi
Fan Connections

Black	1
White	4
Red	3

35CDi II

Black	6.3mm tag
White	4.8mm tag
Red	2.8mm tag

Fig. 10. Functional flow diagram.

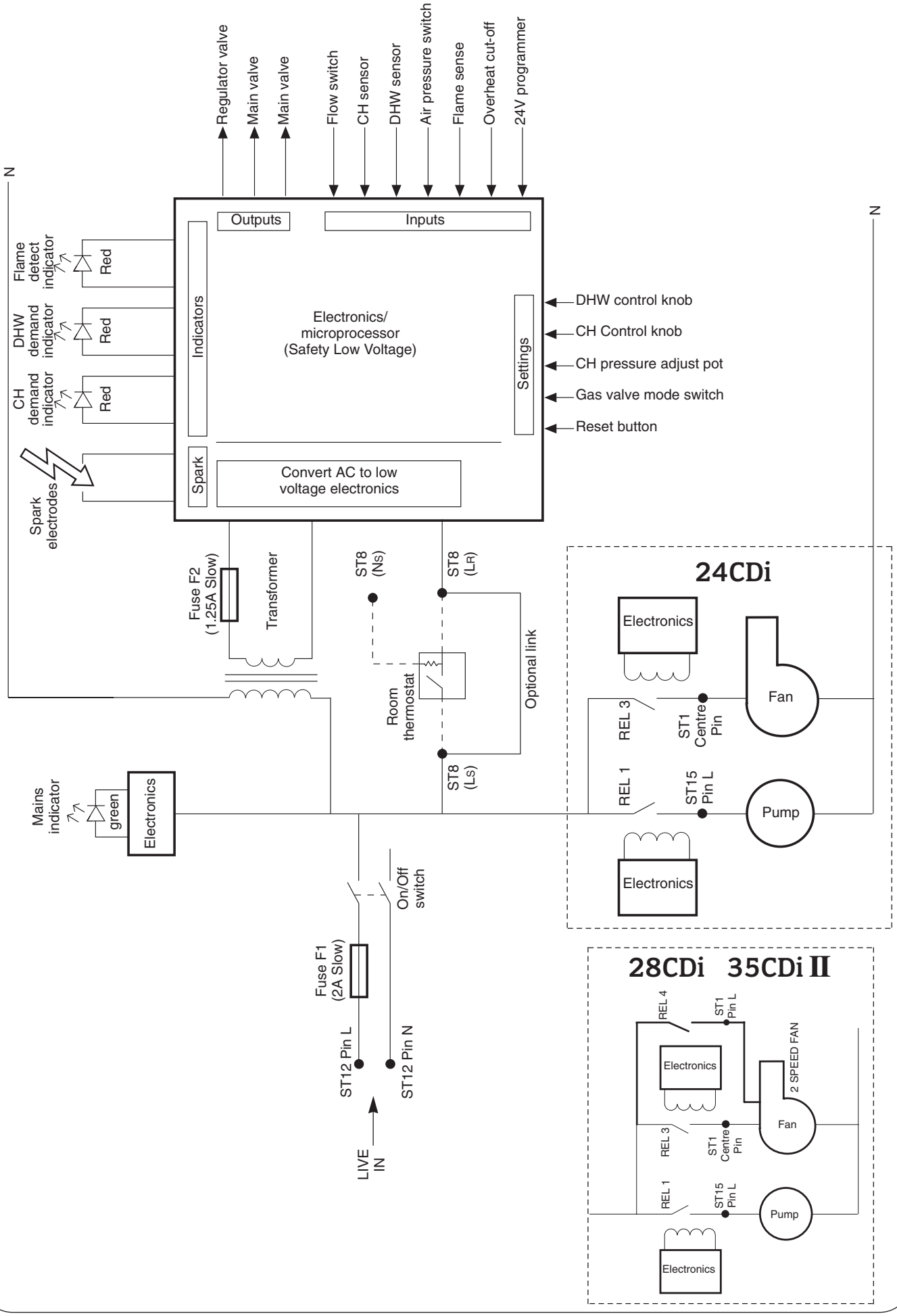

Fig 11 - Electrical Connections

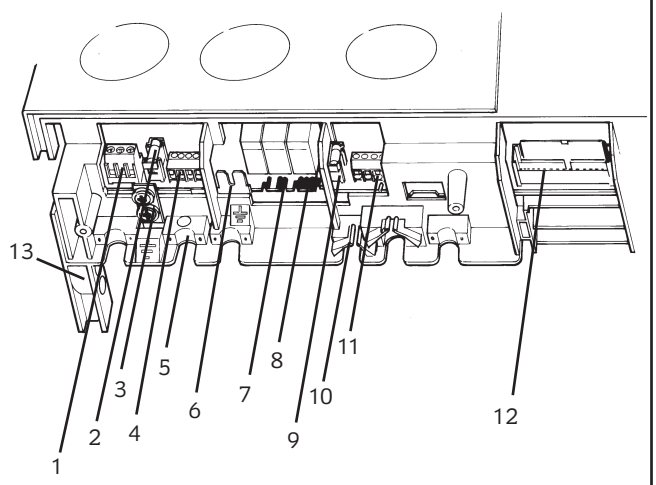

1. ST12-Mains
2. Fuse-F1
3. Earth Screw
4. ST8-Room Thermostat and External Control -Mains Voltage
5. Cable Entry Screw Clamp
6. Earth Tag
7. ST15-Pump
8. ST1-Fan
9. Fuse-F2
10. Cable Entry Clamp
11. ST13-24volt Controls
12. Main Harness and Clamp
13. Control Panel Pivot Point

Fig 12 - Facia Connections Cover

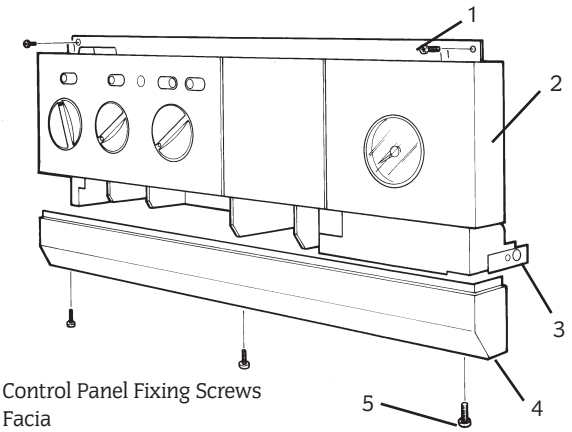

1. Control Panel Fixing Screws
2. Facia
3. Control Panel Pivot Point
4. Connection Cover
5. Connection Cover Fixing Screws

Fig 13 - Mains Voltage External Controls Connections

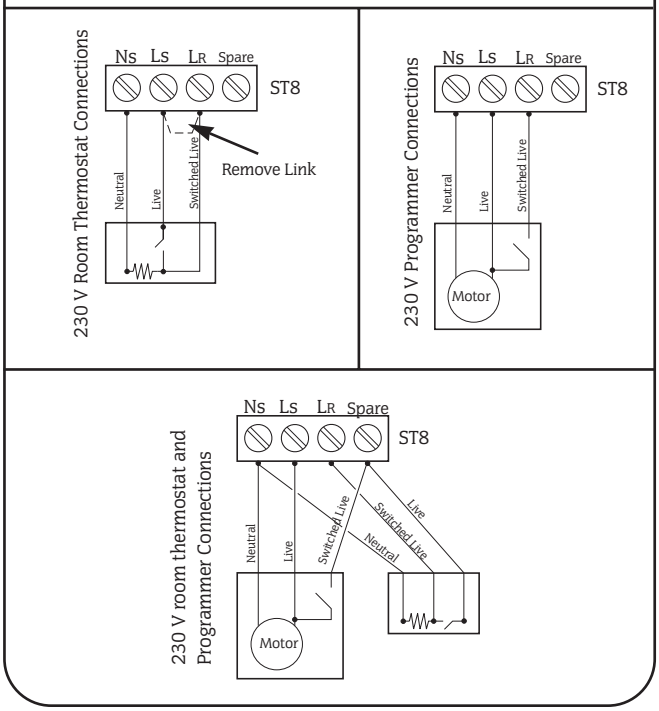

Fig 14 - Replacement Fuses

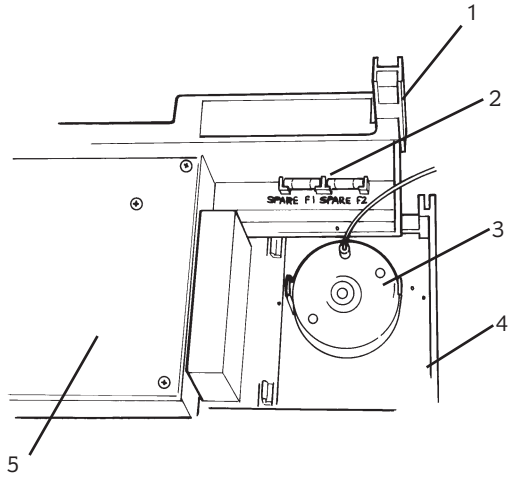

1. Control Panel Pivot Point
2. Fuses-F1,F2
3. Pressure Gauge
4. Facia Panel
5. Control Board Assembly

Fig 15 - Programmer Connection

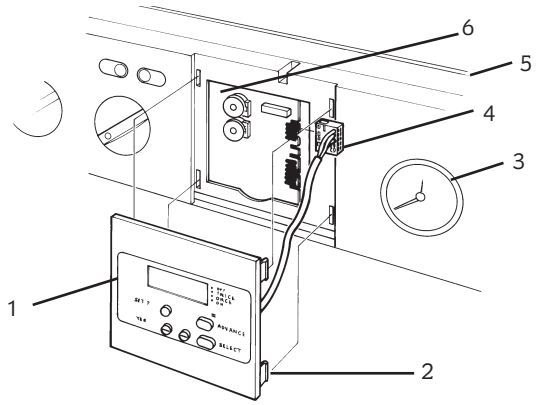

1. Programmer
2. Programmer Fixing Clip
3. Pressure Gauge
4. Programmer Connector
5. Facia
6. Control Board

12. Installation

Read this section fully before starting the Installation.

12.1 General.

The appliance is supplied suitable for fitting to a sealed system. If it is to be fitted to an open vent system refer to Section 9.

The flue must be installed in accordance with BS5440:1.

An optional wall spacing frame is available to allow pipework to be run behind the boiler.

12.2 Unpacking and Appliance Preparation.

Remove all the packaging from the appliance.

Using the two M4 thread-forming screws supplied in the hardware pack assemble the wall-plate cross members to the pre-plumbed manifold. Refer to Fig 16.

12.3 Site Preparation

Check that the wall is sound, flat and will support the weight of the appliance. Refer to Table 4.

Check that the position chosen for the appliance is in accordance with the instructions given in Section 4 and 5.

Ensure that the plastic cover over the valves and 'O' rings is left in place. The cover will protect the valves and 'O' rings against the ingress of dirt and dust.

12.4 Fixing Holes and Flue Opening

Hold the wall-plate to the wall. Check that the plumbing manifold is level.

Mark the position of the fixing holes. Two at the top and two on the plumbing manifold.

Mark the position of the appliance centre-line from the 'V' formed by the wall-plate cross-member. Refer to Fig 16.

Mark a horizontal line across the top of the plumbing manifold. Refer to Fig 16.

Rear Flue:

Draw a vertical line through the centre point marked on the wall. Measure 820mm upwards from the horizontal line marked on the wall along the vertical line and mark the point. This is the rear flue hole centre point position. Refer to Fig 16.

Side Flue:

Extend a line horizontally from the rear flue hole centre point along the appropriate wall.

Measure 197 mm from the junction of the walls and mark a vertical line. Extend horizontally the side flue line to intersect the vertical line to give the position of the side flue hole.

NOTE: If the optional wall spacing frame is used then the 197mm dimension should be increased by 35mm (see instructions supplied with frame).

Check the position and alignment of the holes before drilling the fixing holes (60mm deep for N°12 plugs) and the flue holes Ø110 for external fitting and Ø150 for internal fitting). Ensure that the flue hole is horizontal through the wall. Refer to Fig 16.

12.5 Wall-mounting Plate and Manifold

Fit the plugs and fix the plate/manifold assembly to the wall.

Check that the assembly is properly aligned before tightening the screws.

12.6 Gas and Water Pipes

Remove and discard the plastic cover protecting the valves and 'O' rings. Check that the 'O' rings are fitted and that they are clean and lubricated.

Remove the gas cock, fix the appropriate fitting to connect to the inlet pipe and replace.

Connect the water connections to the manifold. Refer to Fig 3.

Pre-plumbing is not advised if no movement in the pipework is possible.

Pipework can only run horizontally outside the limits of the casing. It is important that the pipes are not fixed near the appliance using clips that put a strain on the connections.

Before the appliance is fitted to the wall the primary system and the mains supply must be thoroughly flushed and treated in accordance with the recommendations of BS7593:1992.

12.7 Install the Boiler

Slide the appliance onto the pre-plumbing manifold ensuring that the three pegs are located correctly.

Secure with two M6 nuts and washers at the top and screw the appliance to the manifold at the bottom using the three retaining caps and M6 bolts. Refer to Fig 17.

Unscrew and discard the automatic air vent cap. Refer to Fig.18.

Lower the facia. Refer to Fig 12.

Fit a discharge pipe to the relief valve leading it away from any electrics or where it may be a hazard. The pipe must not be less than 15mm in diameter and must run continuously downwards outside the appliance.

Fig. 16 . Fixing the wall mounting plate.

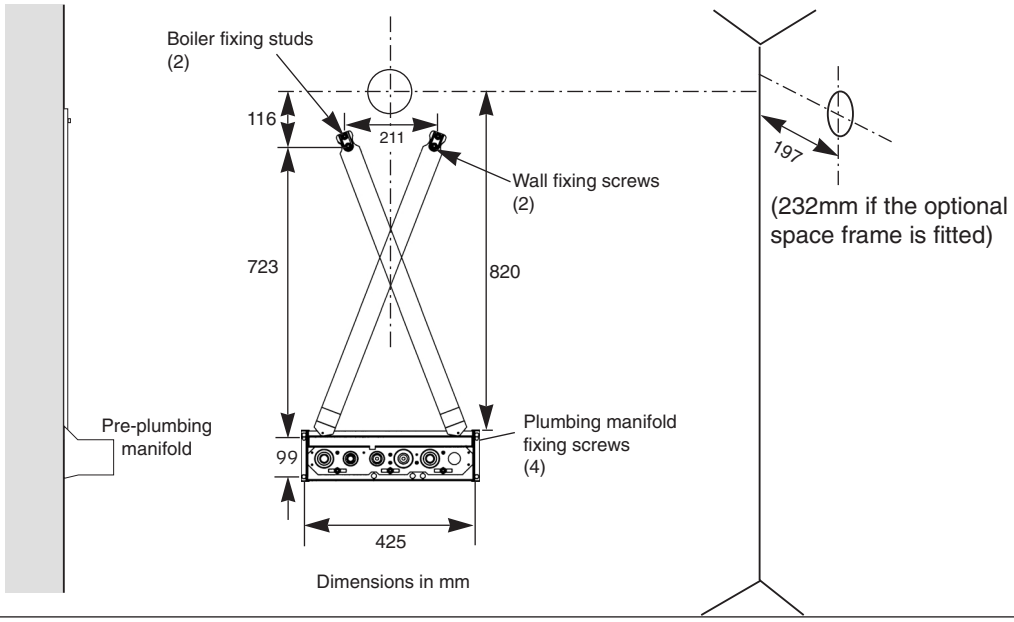

Fig. 17. Fixing the appliance to the wall mounting plate.

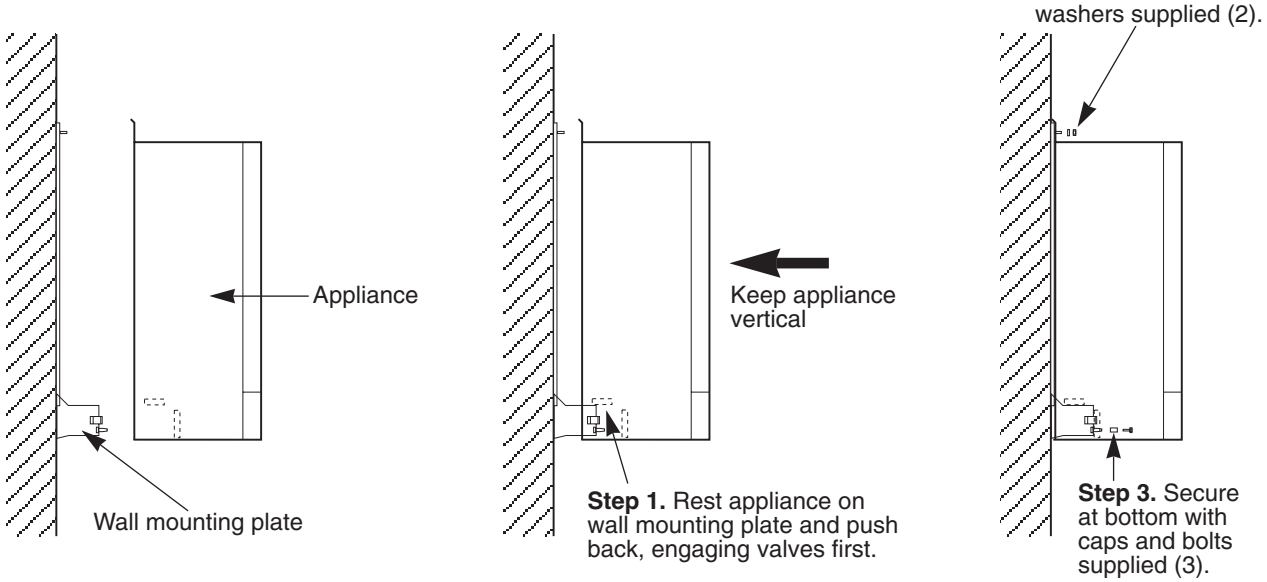

Fig. 18. Flue turret fixing and automatic air vent.

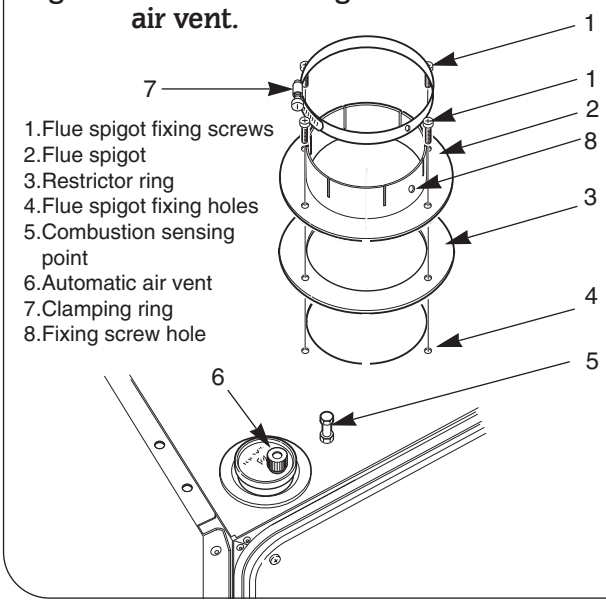

Fig. 19. Flue duct length (rear flue).

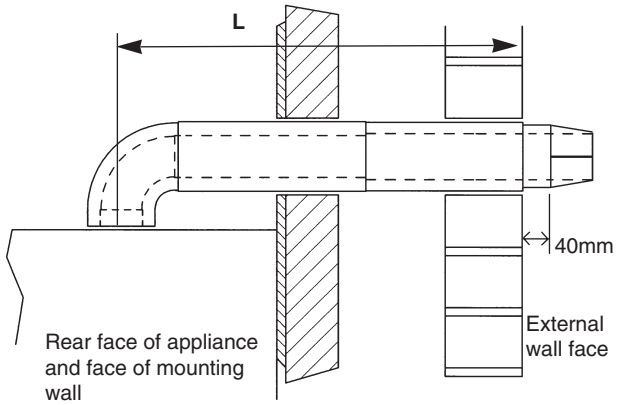

Fig. 20. Flue duct length (side flue).

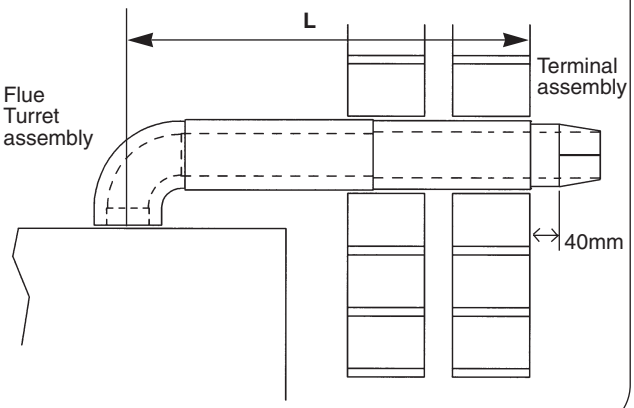

Remove the inner casing cover. Refer to Section 15.3.(b).

If the air/flue duct assembly is to be fitted from inside the building then the ducts must be cut to length, assembled and inserted through the wall now before fitting the flue elbow to the appliance. Refer to Section 12.10 following after the assembly of the flue ducts.

12.8 Air and Flue Duct Preparation.

The method of installation of the flue system may be varied to suit the actual site conditions. The instructions for connecting and fixing the ducts must, however, be strictly followed.

Unpack the flue spigot, restrictor ring and clamping rings from the Flue Spigot Kit in the boiler Installation Pack. Fit the spigot to the boiler top panel with the four screws provided in the Flue Spigot Kit.

IMPORTANT Check the maximum flue length and if it is less than 1m total overall length then fit the restrictor ring as shown in Fig. 18.

24CDi	75mm	Horizontal flue	up to 1m
28CDi	77mm	Horizontal flue	up to 1m
35CDi II	85mm	Horizontal flue	up to 1m

The standard uncut telescopic flue assembly is suitable for flues from 425mm up to 725mm measured from the centre-line of the boiler flue outlet to the outer face of the wall. Refer to Fig.19 & 20.

If L>725mm then extension duct kit/s will be required - each kit

extends the flue by 750mm up to a maximum of 4m. See table below.

EXTENSION	MAXIMUM FLUE LENGTH mm		
	24CDi	28CDi	35CDi II
1	1475	1475	1475
2	2225	2225	2225
3	2975	2975	2975
4	3725	3000	3000
5	4000		

12.9 Measure and Cut the Ducts.
General: Cut the ducts as necessary, ensuring that the ducts are square and free from burrs. Always check the dimensions before cutting.
Measure the distance L. Refer to Fig.19 and 20.

The standard flue can be telescopically adjusted to any length between 425mm and 725mm.
Fix the flue assembly together using the self-tapping screws provided. Refer to Fig.21.

It will only be necessary to cut the standard assembly if L<425mm. Cut the flue turret assembly and the terminal assembly by the same amount i.e L=350 - remove 75mm from each assembly.

Minimum side flue length = 335mm (accommodating a 10mm Service clearance and a 100mm wall)

Minimum rear flue length = 297mm (accommodating a 100mm wall)

	24CDi	28CDi/35CDi II	
If L is between	1175 - 1475mm	1175 - 1475mm	(1 extension)
	1925 - 2225mm	1925 - 2225mm	(2 extension)
	2675 - 2975mm	2675 - 2975mm	(3 extension)
	3425 - 3725mm	N/A	(4 extension)

it is not necessary to cut the ducts.

	24CDi	28CDi/35CDi II	
If L is between	725 - 1175mm	725 - 1175mm	(1 extension)
	1475 - 1925mm	1475 - 1925mm	(2 extension)
	2225 - 2675mm	2225 - 2675mm	(3 extension)
	2975 - 3425mm	2975 - 3000mm	(4 extension)
	3725 - 4000mm	N/A	(5 extension)

It is necessary to shorten the assembly by cutting the first extension duct assembly i.e. L = 1000mm - remove 175mm from the air and flue ducts.
NOTE: Extension duct measurements do not include the socketed end. Unless specifically instructed the socketed end must not be removed.

Fix the flue ducts together before fixing the surrounding air duct, the cut ducts fit into the flue assembly.

12.10. Fitting the Flue Assembly with Access to the Terminal.
Prepare the flue duct assembly as described in Section 12.9.

Apply the plastic tape to the air duct in contact with the external brickwork.
From inside push the assembly through the wall. Align the flue turret and push fully onto the spigot on the appliance. Tighten the clamping ring and fix using the screw provided. Refer to Fig.24.

Make good the internal wall face and the external brickwork or rendering.

Replace the inner casing.

12.11 Fitting of the Flue Assembly without access to the Terminal.
NOTE: A larger diameter opening in the wall is required. Refer to Table 2.

Prepare the flue assembly as described in Section 12.9.

Fit the rubber sealing gasket centrally onto the terminal assembly and tighten the clamp. Refer to Fig. 23.
Apply the plastic tape to the air duct in contact with the external brickwork.

From inside push the assembly through the wall so that the gasket flange is against the outer face. Refer to Fig. 23.
It may be necessary to adjust the legs of the flue centring ring.
Align the flue turret and push fully onto the socket on the appliance. Tighten the clamping ring and fix using the screw provided. Refer to Fig 24.
Seal the gap around the duct at the inner wall face and make good.
Replace the inner casing.

Fig. 21. Flue turret, ducts and terminal assembly

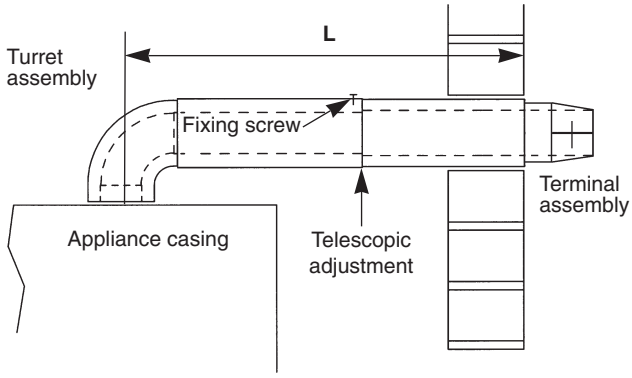

Fig.22. Flue assembly using extension kits.

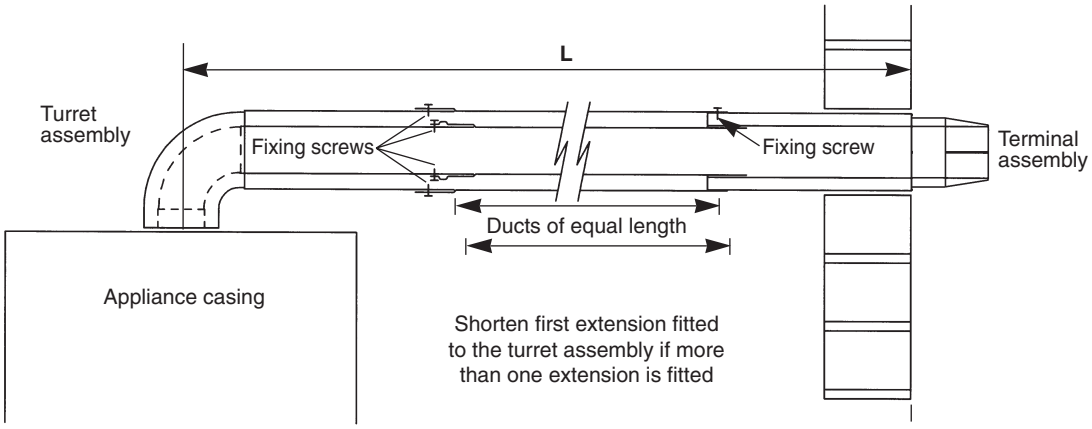

Fig.23 . Terminal assembly for internal fitting of the flue.

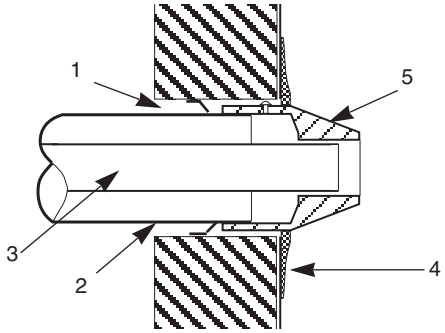

1. Flue centering ring
2. Air duct
3. Flue duct
4. Rubber sealing gasket
5. Flue Terminal

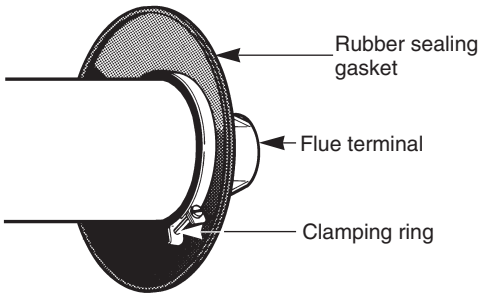

Fig.24 . Flue Turret Fixing .

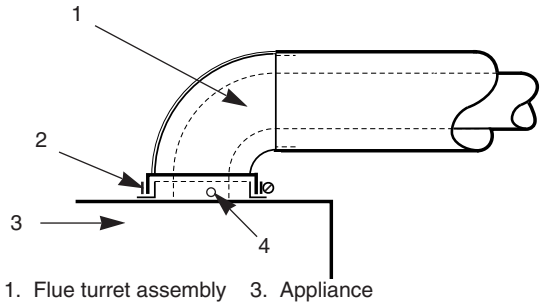

1. Flue turret assembly
2. Clamp
3. Appliance
4. Fixing Screws

12.12. Flue Bends.
90° and 45° bends are available. A maximum of two bends may be used in addition to the first bend on the flue turret.
A 90° bend is equivalent to 750mm of straight duct.
A 45° bend is equivalent to 375mm of straight duct.
A maximum flue assembly of 3m is possible with 1 X 90° bend and 2m with 2 X 90° bends.
Measure the lengths X,Y and Z. Refer to Fig.25.
The maximum value of X using the turret assembly only is 506mm. Reduce the ducts to the appropriate length i.e. X = 406mm, cut 100mm from the air duct and 120mm (to cover the entry into the 45° or 90° elbow) from the flue duct.
NOTE: The flue system ducts between the elbows, dimension Y, requires the socketed ends (of the first extension if two or more are used) to be removed and the air and flue tubes to be cut to the same length.
Cut the ducts to a length Y - 162mm. Refer to Fig.25.
The final section, dimension Z, of the flue system must include a section of plain duct assembly i.e . an extension assembly with the sockets removed. Reduce the final section, including the terminal assembly, by the appropriate amount i.e. Air duct Z - 81mm and the flue duct Z - 51mm. Refer to Fig.25.

If Z<425mm it will be necessary to cut the air and flue ducts of the extension to a plain length of 100mm and reduce the length of the terminal assembly i.e Z=350mm - remove 75mm from the terminal assembly.
If Z in 425 - 725mm it is not necessary to cut the terminal assembly or use a second extension duct as the length can be set telescopically.
If Z>725mm then two extension duct assemblies will be required, the first assembly being cut to length as plain tubes.

If more than two extension ducts are needed in any section to achieve the required length then the final section of the assembly must not be less than 325mm without cutting the terminal assembly.
NOTE: The flue duct of the final extension must be 30mm longer than the air duct.

Each section must be connected to the previous section of the flue bend by fixing the flue ducts together and then similarly fixing the air ducts which engage the elbows.

Fit the assembly as described in Section 12.10, 12.11. as appropriate.
Make good the internal and external brickwork or rendering.

12.13 Vertical Adapter for Horizontal Flues.
An adapter is available for an initial short section of vertical flue.
Measure and cut the flue as described in Section 12.12.

Fig. 25. Fitting the flue bends to the intermediate sections of the flue duct.

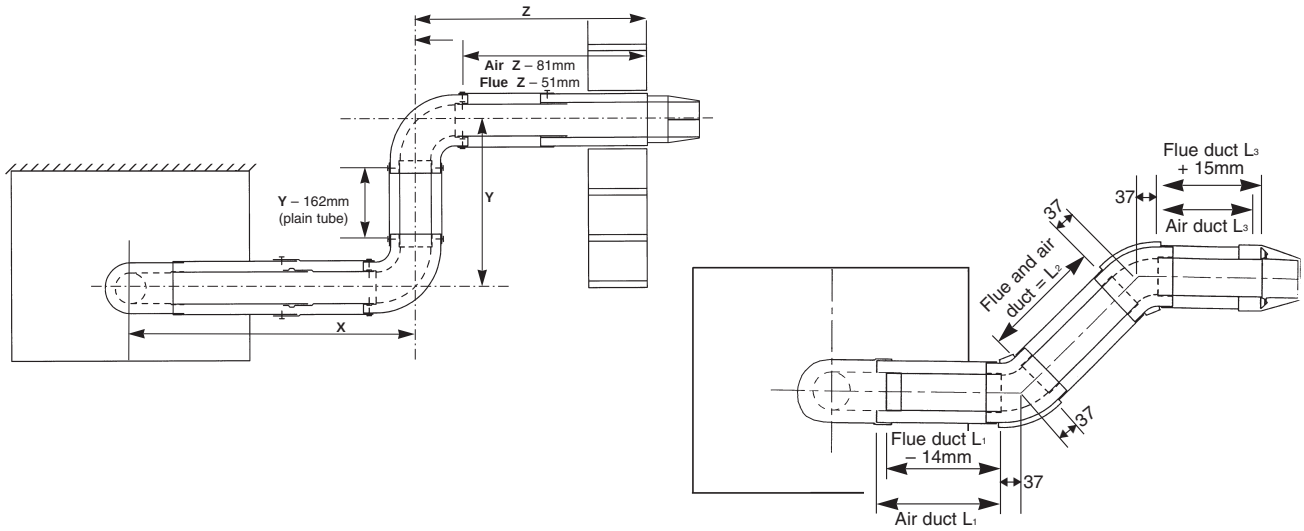

The first, vertical, section (equivalent to dimension X) is measured from the top of the boiler casing. Cut the vertical section of the extension duct to 167mm less than the measured distance. Do not remove the socketed ends.
The minimum measured distance is 167mm.
Seal the air duct to the turret using silicone sealant.

12.14 Completion of the Installation

Check that the gas and water connections have been tightened. Refer to Fig.3.

Fit the, optional, facia mounted clock or programmer. Refer to the instructions sent with the control. Refer to Fig. 15.

Remove the facia bottom panel. Refer to Fig.12.

Connect the mains electricity supply to the appliance at terminal ST12. Refer to Fig.8. The mains cable must be clamped.

Connect any room and/or frost thermostats, the electrical leads must pass through the appropriate space in the control panel and be fixed with the cable clamps provided. Refer to Fig.11.

Refit the facia bottom panel.

Test the gas supply pipework to the appliance for soundness as indicated in BS6891.

If the appliance is not to be commissioned immediately, replace the cabinet front panel. Check that the gas supply, the electrical supply and the water connections are turned off.

If the appliance is to be filled and pressurised refer to Section 13, Commissioning for a full description.

If the premises are to be left unoccupied during freezing conditions then drain, or do not fill, the appliance and the system. For short periods commission the appliance, Refer to Section 13, and leave the appliance under the control of the built-in frost thermostat or remote frost thermostat (if fitted) or leave operating continuously with the room thermostat set at 6°c.

13. Commissioning

Benchmark Water Treatment: For optimum performance after installation, this boiler and its associated central heating system should be flushed in accordance with the guidelines given in BS7593:1992 - Treatment of water in domestic hot water systems. Full instructions are supplied with proprietary cleansers sold for this purpose. If an inhibitor is to be used after flushing, it should be used in accordance with the inhibitor manufacturers instructions.
Suitable flushing agents and inhibitors are available from Betz Dearborn Tel: 0151 4209563 and Fernox Tel: 01799 550811. Instructions for use are supplied with these products.

IMPORTANT: Any system cleanser must be flushed from the system before an inhibitor is added.

13.1 SUMMARY

The appliance is dispatched with the controls set to provide a maximum output for domestic hot water and central heating load of 24 kW (24/28CDi) or 27.5kW (35CDi II).
The appliance automatically modulates to satisfy lower heat loads.

Domestic Hot Water Circuit

Confirm that the mains water supply has been flushed out at installation. If not it will be necessary to disconnect the cold water inlet pipe from the appliance and thoroughly flush.

Central Heating System

Confirm that the system has been fully flushed out at installation using a flushing agent. Flush the system before starting to commission the appliance and, at the end of the commissioning procedure, add a suitable flushing agent and drain whilst hot. Immediately refill and re-pressurise.

Gas Service. The complete system, including the meter, must be inspected and tested for soundness and purged as indicated in BS 6891. In the event of a leak, or suspected leak, at the 'O' ring joint on the main appliance manifold, connect a manometer to the test point on the inlet of the multifunctional gas valve. A soundness test carried out after turning off the appliance gas cock will test the section between the gas cock and the gas valve, thus enabling the leak to be traced to either a visible joint or to the 'O' ring.

13.2 APPLIANCE AND CENTRAL HEATING SYSTEM PREPARATION

Remove the cabinet front panel.
Check that the electrical supply and the gas service to the appliance are off.
Check that all the water connections throughout the system are tight.
Open the system valves at the appliance. Open all the radiator valves, fill the system and vent each radiator in turn.
Remove the bottom panel to gain access to the filling loop assembly. Refer to Section 15.3d The grey knob for the filling loop is packed in the hardware pack and

Fig. 26. Appliance Casing, Facia Controls and Location of Equipment.

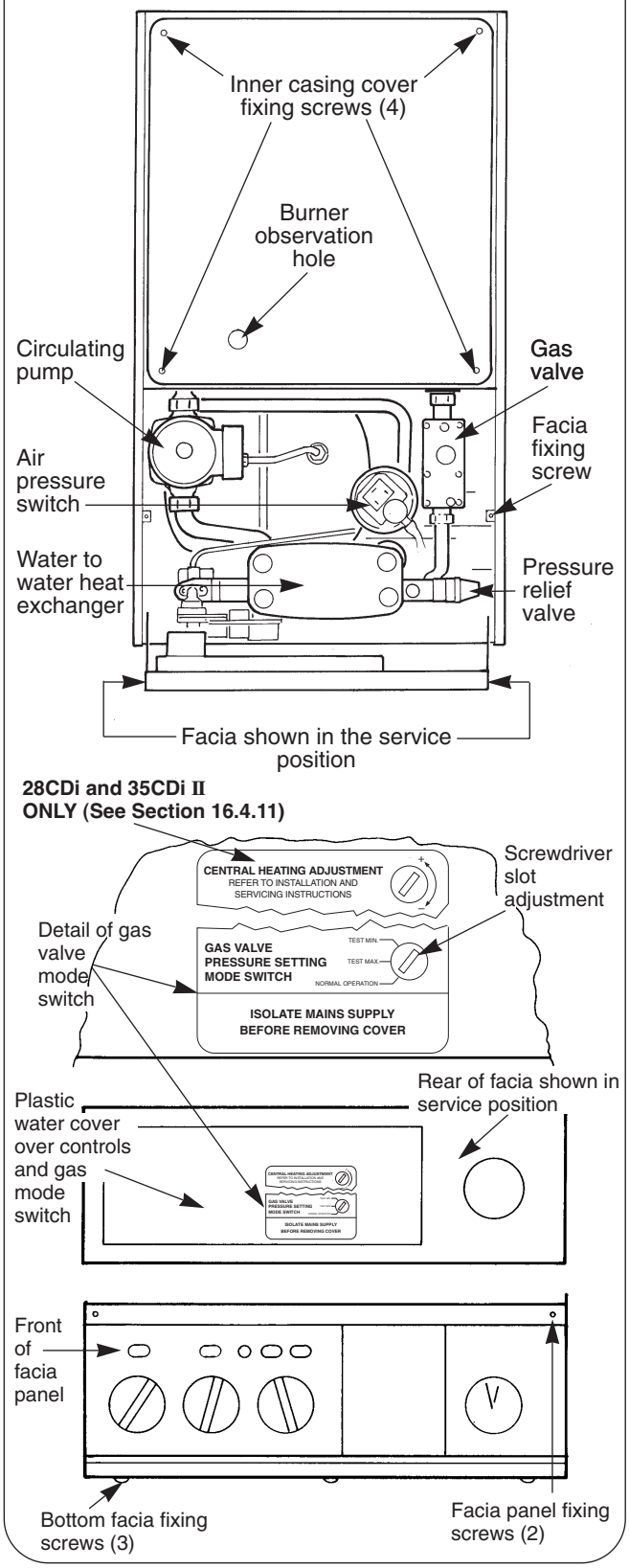

should be fitted as shown in Fig. 6,6a.

Insert the bayonet end of the filling key into the corresponding cutouts in the filling loop housing and twist to lock the key in place.

Turn the grey knob anti-clockwise to allow water ingress and fill until the pressure gauge reads 2.5 bar.

Turn the grey knob clockwise to stop filling and remove the filling key by lining up the bayonet end of the key with the cutouts in the filling loop housing and withdrawing the key.

N.B. The key must always be removed from the filling loop housing after the system has been filled to prevent accidental filling and to comply with Byelaw 14 of the Water Byelaws Scheme.

Store the key in a safe place for future use and refit the bottom panel.

The automatic air vent will vent the appliance. Check that the air vent cap has been loosened. See Fig. 18.

Check that the pressure relief valve operates by turning the knob anti-clockwise until it releases. Water should be expelled from the discharge pipe. See Fig. 27.

Lower the facia panel to gain access. Refer to Section 15.3, c.

Set the Expansion Vessel Pressure

The charge pressure of the expansion vessel as dispatched is 0.5 bar, which is equivalent to a static head of 5 metres (17 ft). The charge pressure must not be less than the static head at the point of connection. A Schraeder type tyre valve is fitted to the expansion vessel to allow the charge pressure to be increased if necessary.

Fig. 27. Pressure relief valve.

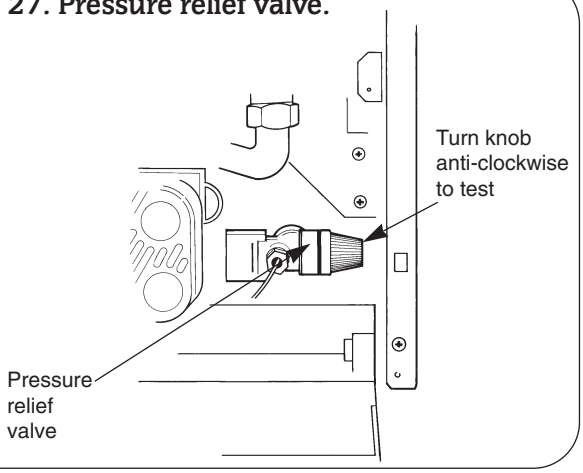

Set the system pressure

Release water from the system using the relief valve test knob (see Fig. 27), until the system design pressure is obtained, up to a maximum of 1.5 bar.

Initial system design pressure (bar) = Expansion vessel charge pressure + 0.3 bar.

NOTE: 1 bar is equivalent to 10.2 metres (33.5ft) of water.

Set the movable pointer on the pressure gauge to coincide with the indicating pointer giving a permanent record of the set system pressure.

If the pressure indicated on the pressure gauge is greater than 2.6 bar when operating at the maximum central heating temperature, an extra expansion vessel must be fitted to the system as close as possible to the appliance central heating return connection.

The appliance (as dispatched) can accommodate a system volume of about 83 litres. Refer to BS 7074 Part 1. If the system volume is in excess of that accommodated by the expansion vessel fitted to the appliance then an extra vessel must be fitted as close as possible to the central heating return connection of the appliance.

Any extra vessel fitted must be pressurised to the same figure as the integral vessel. If the expansion vessel fails then the specified replacement must be fitted.

13.3 PROGRAMMER

Any programmer fitted on the appliance should be set up at this stage following the instructions sent with the programmer.

The programmer will retain the settings for up to three weeks following an interruption in the electricity supply.

13.4 APPLIANCE OPERATION

Turn off the gas and electricity supplies to the appliance.

Loosen the burner pressure test point screw on the gas valve and connect a pressure gauge. See Fig. 28.

Undo the two screws and hinge down the facia to gain access to the mode switch. Refer to Fig. 12.

Domestic Hot Water.

Set the gas valve mode switch, at the rear of the facia, to the maximum position. Refer to Fig. 26.

Turn on the gas and electricity supplies.

Set the CH temperature control knob fully anti-clockwise to

and the DHW temperature to MAX.

Open a hot water tap.

A continuous ignition spark will occur until the burner is alight and

Fig. 28. Gas Valve

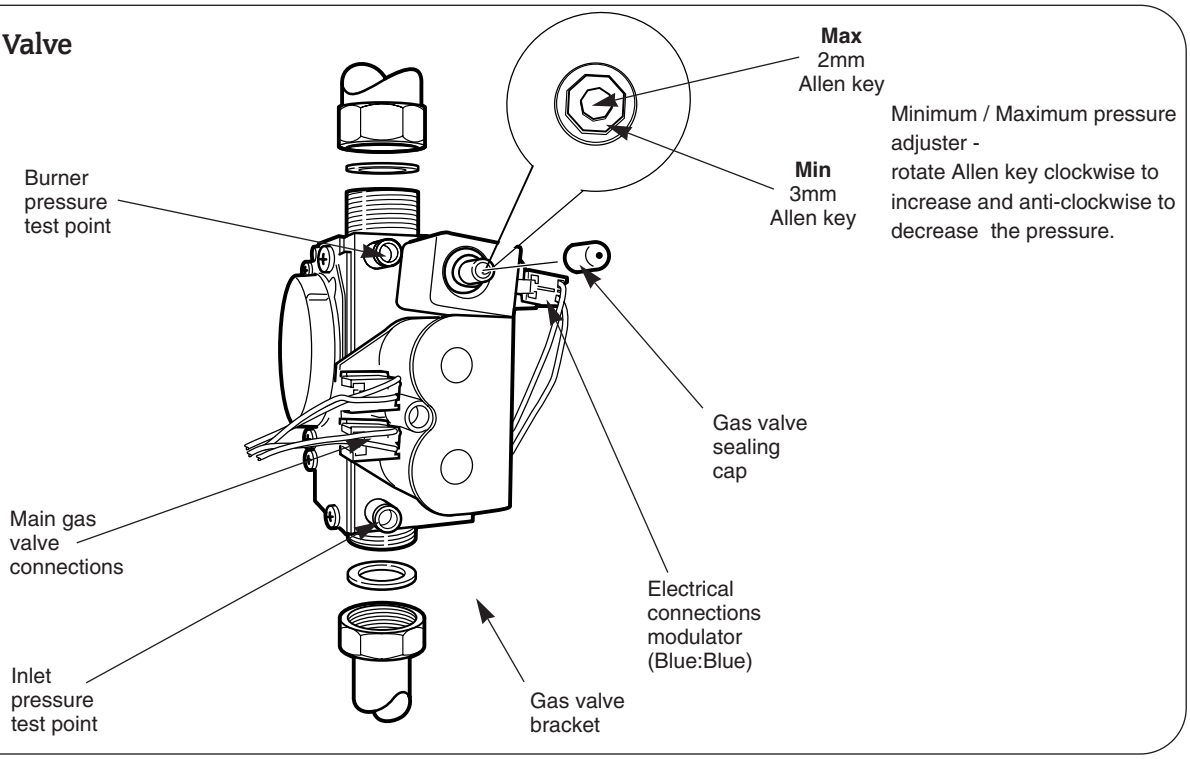

sensed by the control circuit. The burner pressure should be 14.8mbar (24CDi) or 15.5mbar (28CDi) or 13.5mbar (35CDi II) for natural gas and 35.5mbar (24/28CDi) or 34.7mbar (35CDi II) for propane. If the burner pressure cannot be achieved then check that the inlet pressure at the appliance is 20mbar for natural gas and 37mbar for propane. This is equivalent to a 18.5-19.0 mbar (G20) or 36 mbar (G31) at the gas valve.

Set the gas valve mode switch to the minimum position.

The burner pressure will drop to the minimum setting which should be 1.5mbar (24CDi) or 1.0mbar (28CDi) or 0.9mbar (35CDi II) for natural gas or 5.4mbar (24CDi) or 3.8mbar (28CDi) or 3.1mbar (35CDi II) for propane.

Test for gas soundness at the joint between the burner and the gas valve with leak detection fluid.

NOTE: The burner pressure is factory set and if (after checking that the supply pressure is sufficient) the correct pressure is not obtained then Worcester Heat Systems Service Department should be contacted.

If the appliance does not light, check that it is not in the 'lockout' state by pressing the lockout reset button. See Fig. 30.

Set the gas valve mode switch back to the normal position and refit the facia.

Turn off the electricity supply, and then back on again to reset the controls.

Gradually close the hot tap and check that the burner pressure drops. Fully open the tap and check that the burner pressure rises. Fully close the tap and check that the burner goes off. The fan may continue running until the appliance has cooled to a preset temperature.

Set the Operating Switch to OFF.

Central Heating

Check that all the radiator valves are open. Set the room thermostat and the Central Heating Temperature Control to maximum. Set the DHW temperature control to MIN.

On sealed systems check that the system is pressurised and set to the required pressure as indicated on the gauge.

Set the Programmer, if fitted, to HEATING & WATER.

Set the operating switch to ON.

The burner will light.

The appliance will modulate its output from 9.0 to 24.0 kW (24/28CDi) or 10.5 to 27.5 kW (35CDi II) over a period of about two minutes.

Check the system to ensure that all the radiators are heating up evenly. If not then bleed each radiator through its vent screw.

Shut down all but one of the radiators and observe the burner pressure fall. Open all of the radiator valves and check that the burner pressure rises.

Balance the system so that the required temperature difference across the central heating flow and return pipes is obtained. See Table 3.

Adjust the central heating by-pass valve until the same temperature difference is obtained. See Fig. 29. This should be carried out with only a single radiator operating. If thermostatic radiator valves are fitted then one radiator should be left uncontrolled. The bypass valve should never be fully closed.

Set the room thermostat to minimum and check that the burner goes out. Reset the room thermostat to maximum and the burner will re-light and follow the normal operating procedure.

Check for proper ignition of the burner after a break in the gas supply. Turn off the gas service cock and wait for 60 seconds. The burner will go out but sparking from the electrode will continue for 10 seconds when the appliance will enter a 'lockout' state. Carefully open the gas service cock, press the lockout reset button and observe the burner re-light and follow the normal sequence of operation. Refer to Fig.30.

Set the Operating Switch to OFF.

Turn off the gas service cock and the electrical supply to the appliance.

Drain the system while the appliance is still hot.

Refill, vent and, with a sealed system, re-pressurise as described in Section 13.2.

Domestic Hot Water and Central Heating

Turn on the electricity supply to the appliance and open the gas supply cock at the appliance.

Set the Operating Switch to ON. If a programmer is fitted, set the domestic hot water to Continuous or 24Hrs and the central heating to ON. The burner will light and heat will pass into the system. Set the DHW temperature to MAX and turn on a hot water tap and check that fully heated hot water is discharged from the tap.

Close the tap and the burner will go off. The appliance will then return to the central heating mode and automatically balance with the system requirements.

Set the Operating Switch to OFF and the burner will go out.

12.5 COMPLETION OF COMMISSIONING

Disconnect the pressure gauge from the gas valve and tighten the test point screw.

Restart the appliance and check for gas soundness around the test point screw.

Refit the cabinet front panel.

If the appliance is being passed over to the user immediately, refer to Section 14 - Instructions to the User.

If the appliance is to be left inoperative, check that the Operating Switch is set to OFF. Turn off the gas service cock.

For short inoperative periods, leave the appliance under the control of the built in frost thermostat or the remote frost thermostat (if fitted) or leave operating continuously with the room thermostat set at 6°C

Do not switch off the electricity supply.

If there is any possibility of the appliance and the system being left totally unused in freezing conditions then switch off the gas and electricity and drain the appliance and the system.

Fig. 29. Central heating by-pass adjustment.

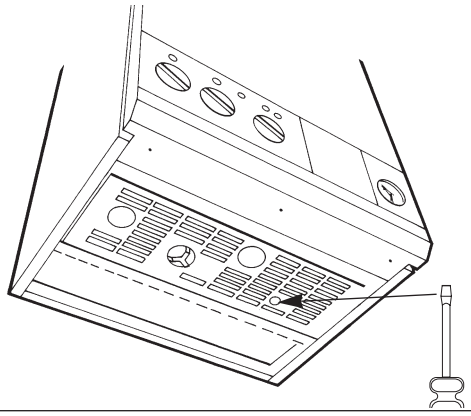

14. Instructions To The User

Fig. 30. User controls.

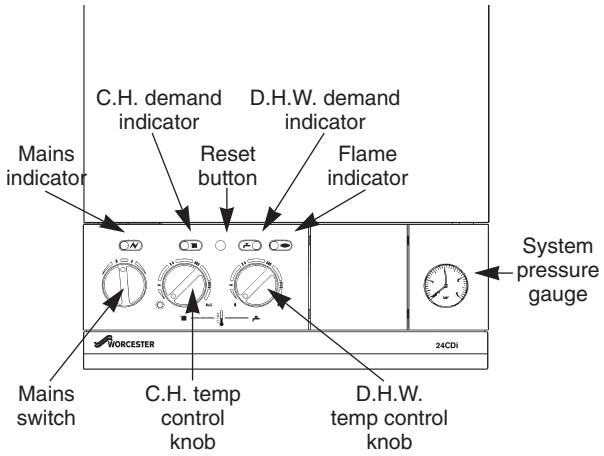

14.1 Tell the user how to operate the appliance and hand over the Users Instructions leaflet and Benchmark log book.

14.2 Tell the user what to do if the heating system is not to be used in frosty or freezing weather.

14.3 Tell the user the sealed system set pressure.

14.4 Tell the user of the importance of regular servicing. Worcester Heat Systems Ltd. offer a comprehensive maintenance contract.

14.5 Set the system controls to the user's requirements.

14.6 If an external programmer has been fitted which has a programmable domestic hot water facility then it is suggested that this be set to Continuous or the equivalent.

14.7 Tell the user about the safety devices and hazard notices.

15. Inspection And Servicing

15.1 SERVICING

To ensure continued efficient operation of the appliance it must be checked and serviced as necessary at regular intervals. The frequency of servicing will depend upon the particular installation conditions and usage, but once per year should generally be adequate. The extent of the service required by the appliance is determined by the operating condition of the appliance when tested by fully qualified engineers.

Any service work must be carried out by competent engineers such as British Gas or Corgi registered personnel.

15. 2 PRE-SERVICE INSPECTION

Check that the flue terminal and the terminal guard, (if fitted), are clear.

If the appliance is in a compartment, check that any ventilation openings in the compartment door or walls are clear. See Section 6 - Air Supply.

Check the system and remake any joints or fittings, if necessary, which show signs of leakage. Refill, vent and re-pressurise as described in Section 13.2.

Operate the appliance and the system taking note of any faults.

Measurement of the Flue Gases

For consistency of results of the flue gas measurements it is necessary to have a constant output and stationary equilibrium.

Switch on the appliance.

Switch to DHW and CH mode.

Hinge down the facia.

Turn the Mode Switch to the "Max." position.

Wait until the appliance reaches stationary equilibrium (approx. 10 minutes).

Remove the cap from the sensing point. See Fig. 18.

Insert the probe into the measurement gap up to a depth of 50mm.

Seal any gaps.

Expected measurements should be between:

CO: 0.001 and 0.003%.

CO_2: 6.7 and 7.0%.

After taking the measurement:

Replace the sealing cap.

Turn the Mode Switch back to the "normal" position.

Put the facia back in to its normal position.

SAFETY

Disconnect the electrical supply at the mains and turn off the gas supply at the gas service cock on the appliance before servicing.

After completing the service always test for gas soundness as indicated in BS 6891.

15. 3 COMPONENT ACCESS

To carry out a full and comprehensive service of the appliance remove the following parts to gain access to the components which need to be checked or serviced.

(a) Cabinet Front Panel. Remove by lifting off the supports.

(b) Inner Casing Cover. Check that the electricity supply to the appliance is turned off. Remove the cabinet front panel. Unscrew the four screws securing the cover to the casing and lift off. See Fig. 26.

(c) Facia Panel. Check that the electricity supply to the appliance is turned off. Remove the cabinet front panel. Unscrew the two upper screws as shown in Fig.12 and hinge down the facia taking care not to distort the pressure gauge capillary tube or electrical connections.

(d) Bottom panel. Hinge down the facia panel. Disengage the front edge of the bottom panel from the two clips and remove the bottom panel from the appliance.

(e) Fan. Remove the inner casing cover. Carefully unplug the electrical connections and pull off the sensing tubes. Unscrew the three fixing screws and remove the fan assembly. See Fig. 31.

Fig. 31. Appliance components and fixings (upper assembly).

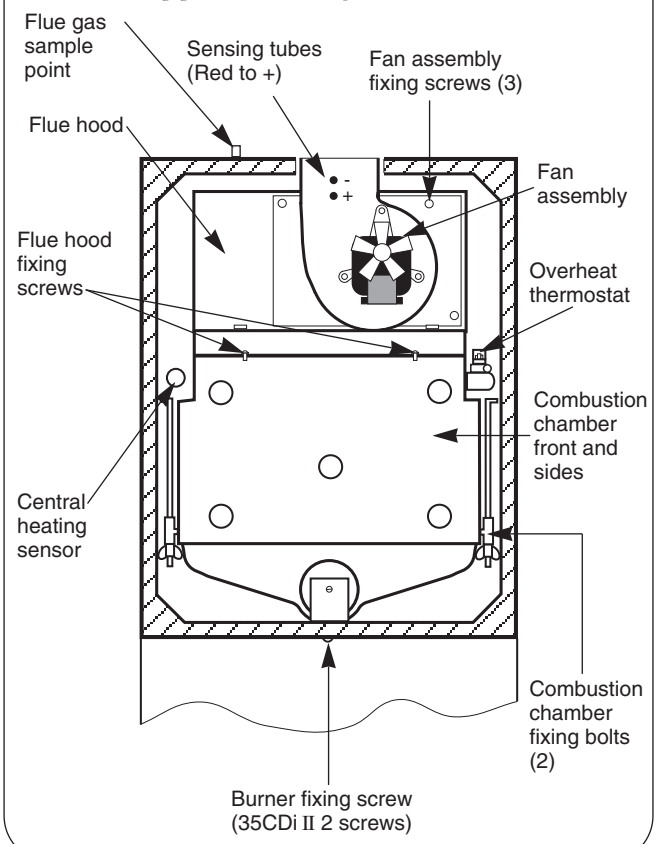

(f) Flue Hood Assembly. Remove the fan assembly. Undo the two screws securing the flue hood. Lift and slide the flue hood assembly from the appliance. See Fig. 31. When refitting the hood ensure that the rear return edge passes under the lip at the rear of the combustion chamber.

(g) Combustion Chamber Front and Sides. Remove the inner casing cover. Slacken off to the end of the thread but do not remove the two wing nuts securing the combustion chamber. Unhook the securing rods out of the locating holes in the combustion chamber sides. Ease the combustion chamber front and side assembly clear of the appliance. Refer to Fig. 31.

(h) Burner Assembly. Remove the combustion chamber front and sides. Pull off the two spark electrode leads and disconnect the flame sense lead at the plastic connector under the inner casing. **NOTE:** The flame sensing lead is attached to the burner. When the burner is removed ensure this lead is fed through the inner casing. Remove the grommet seal to allow the plastic connection to pass through the inner casing. Unscrew the G $^3/_4$ union nut on top of the gas valve and retain the sealing washer. Unscrew the front burner fixing screw. Lift the burner and ease the union nut through the inner casing sealing grommet.

Remove the burner assembly clear of the inner casing.
Ensure the flame sensing lead passes through the base of the inner casing. See Fig. 31 and 32.

15. 4 SERVICE OF COMPONENTS

Clean the Fan. Any dust or fluff should be removed with a soft brush or by blowing. Take care not to distort the pressure sensing device.

Clean the Main Burner. Brush the blade tops and mixing tube with a soft brush and check that all the flame ports are clear. Remove any blockages with a non-metallic brush. Inspect the injector and clean with a soft brush. Replace the injector if it appears damaged. Do not use a wire brush or anything likely to cause damage. Replace the spark and sense electrodes if they appear damaged.

Fig. 32. Burner and Electrode (24/28CDi shown)

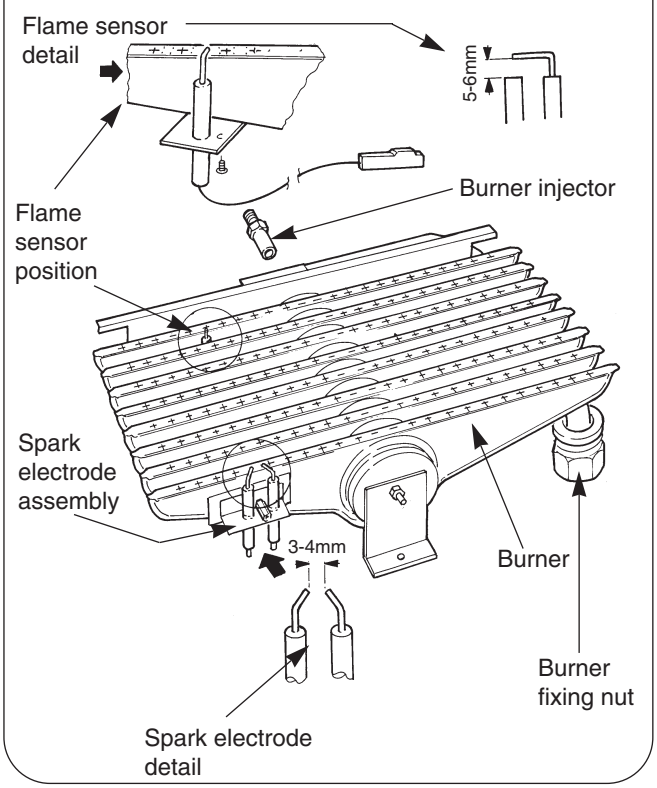

Clean the Gas to Water Heat Exchanger. Cover the burner manifold hole in the combustion chamber bottom panel with a cloth. Clean the heat exchanger using a soft brush. Remove the deposits from the bottom of the combustion chamber. Do not distort any of the blades.

Combustion Chamber Insulation. Examine and replace any pads that are damaged. Remove any dust or deposits using a soft brush after first dampening the pads.

Reassemble the appliance in the reverse order.

Check that all components are in place and correctly fixed. Leave the cabinet front panel to be fitted after checking the operation of the appliance.

15. 5 TEST THE APPLIANCE

On completion of the service and reassembly of the appliance, check for gas soundness and the correct operation of the appliance as described in Section 13 - Commissioning.

Refit the cabinet front panel and reset the controls to the users requirements.

16. Replacement Of Parts

16.1 SAFETY

Switch off the electricity and gas supplies before replacing any components. After the replacement of any components, check for gas soundness where relevant and carry out functional checks as described in Section 13 - Commissioning

16.2 COMPONENT ACCESS

To replace components it is necessary to remove one or more sections of the cabinet and cover plates within the appliance as described in Section 15.3. Any 'O' ring or gasket that appears damaged must be replaced. Complete gasket and 'O' ring packs are available for the gas and water connections on the appliance. The facia panel may also need to be hinged down as described in Section 15.3, c.

16.3 DRAINING THE APPLIANCE

Check that the electricity supply to the appliance is turned off. Before removing any component holding water it is important that as much water as possible is removed from the appliance.

(a) Central Heating Circuit. Turn off the central heating flow and return valves at the appliance. Fit tubes to the drain taps on the flow and return manifolds and open the drain taps about one turn, make sure that the dust cap on the auto air vent is loosened. See Fig. 18. Close the drain taps when the flow has stopped. Be careful **not to overtighten** the drain taps. Some water will remain in the expansion vessel, pump, diverter valve, water to water and Gas to Water heat exchangers and extra care must be taken when removing these components.

(b) Domestic Hot Water Circuit. Turn off the mains cold supply valve at the appliance and open the lowest hot water tap. A quantity of water will remain in the Water to Water heat exchanger and the diverter valve and extra care must be taken when removing these components.

Replace any components removed from the appliance in the reverse order using new gaskets/'O' rings/sealant where necessary. Always check that any electrical connections are correctly made and that all screws are tight.

16.4 COMPONENT REPLACEMENT

1. Automatic Air Vent. See Fig. 34

Remove the inner casing cover as described in Section 15.3, b.
Drain the central heating circuit as described in Section 16.3, a.
Remove the circlip and lift the assembly from the appliance.
Unscrew air vent from the pipe.
Fit the replacement assembly, making sure the 'O' ring is in good condition. Replace if necessary.
Ensure that the circlip is correctly fitted and the dust cap is loosened.
Open the valves and fill and re-pressurise the system as described in Section 13.2.

2. Air Flow Pressure Switch. See Fig. 33.

Check that the electricity supply to the appliance is turned off.

Remove the cabinet front panel as described in Section 15.3, a.

Carefully pull off the sensing tubes and the electrical connections from the switch.

Unscrew the two screws underneath the gas valve and remove the switch and bracket from the appliance.

Fit the replacement switch in the reverse order ensuring that the electrical connections have been made to the correct terminals on the switch. Check that the sensing tubes are fitted correctly.

3. Fan. See Fig. 31.

Check that the electricity supply to the appliance is turned off.

Remove the fan assembly as described in Section 15.3, e.

Fit the replacement fan in the reverse order.

Fig. 33. Air pressure switch.

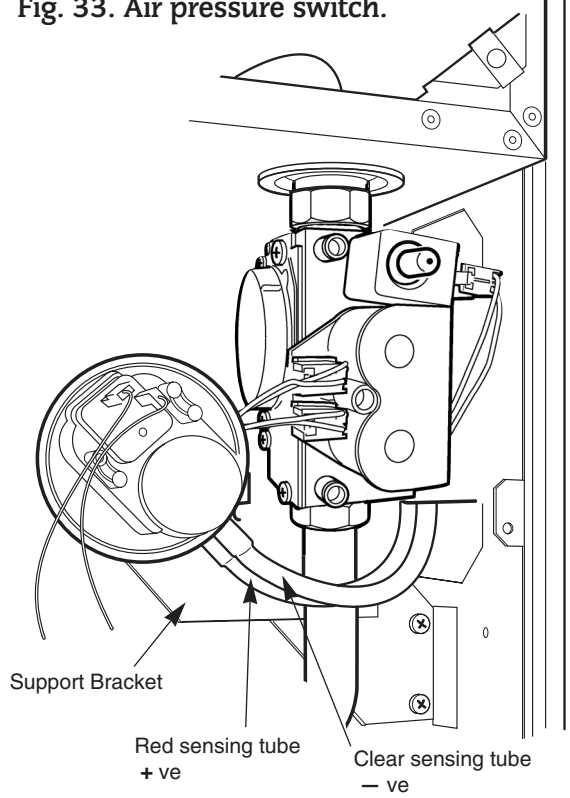

Fig. 34. Gas to water heat exchanger.

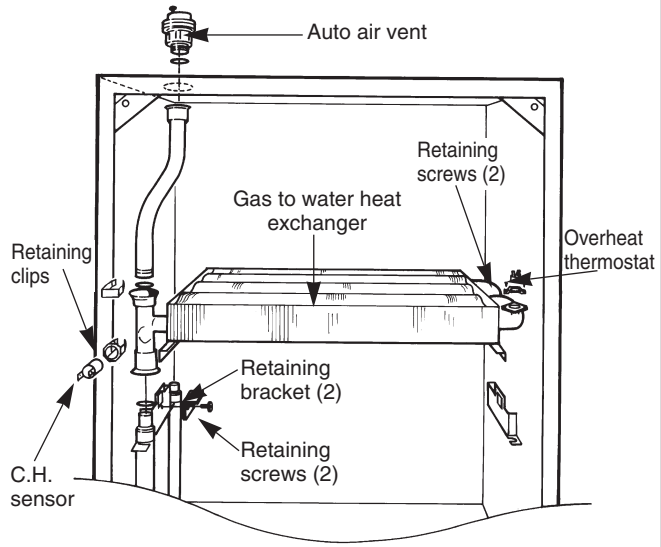

4. Overheat Thermostat. See Fig. 34.

Check that the electricity supply to the appliance is turned off.

Remove the inner casing cover as described in Section 15.3, b.

Carefully pull off the two wires from the thermostat head.

Undo the two M3 screws and remove from the appliance.

Fit the replacement thermostat in the reverse order ensuring that some heat sink compound is between the thermostat and the plate.

5. Gas to Water Heat Exchanger. See Fig. 34.

Check that the electricity supply to the appliance is turned off.

Drain the central heating circuit as described in Section 16.3, a.

Remove the inner casing cover, fan, flue hood assembly, overheat thermostat, central heating sensor, burner and automatic air vent assembly as described in Sections 15.3, b, e, f, and h, 16.4, 1, 16.4, 3 and 16.4, 12.

Slacken the two screws to remove the two retaining brackets and lift the heat exchanger from the casing. Take care that the rear insulation pad does not drop forwards onto the burner.

Fit the replacement heat exchanger in the reverse order ensuring that both the "O" rings are correctly fitted and lubricated and a layer of heat sink compound is on both the thermostats.

Open the valves and fill and re-pressurise the system as described in Section 13.2.

6. Combustion Chamber Insulation. Refer to Fig. 35.

Check that the electricity supply to the appliance is turned off.

Drain the central heating circuit as described in Section 16.3, a.

Remove the inner casing cover, fan, flue hood assembly, burner, and Gas to Water heat exchanger as described in Sections 15.3, b, e and f, and 16.4,5. Remove the fibre insulation pads from the combustion chamber side, rear, and front sections. To avoid the risk of fine particles dampen the pads before removal.

Fit the replacement pads in the reverse order taking care not to damage them.

Open the valves and fill and re-pressurise the system as described in Section 13.2.

Fig. 35. Combustion Chamber Insulation

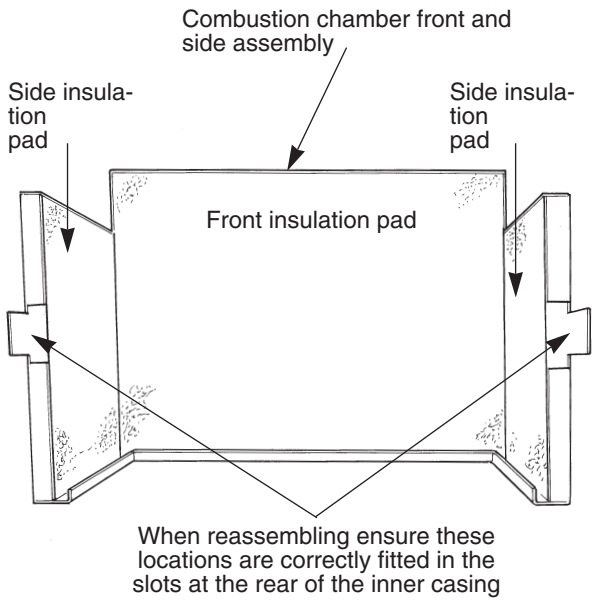

7. Burner. See Fig. 32.

Check that the electricity and gas supplies to the appliance are turned off.

Remove the burner assembly as described in Section 15.3, h.

Fit the replacement burner in the reverse order taking care not to damage the electrode leads.

8. Burner Injector. See Fig. 32.

Remove the burner as described in Section 15.3, h.

Unscrew the brass injector from the burner.

Fit the replacement injector in the reverse order.

9. Spark Electrode Assembly. See Fig. 32.

Remove the combustion chamber front and sides as described in 15.3, g.

Carefully pull off the two electrode leads,

Undo the M4 extended nut and remove the spark electrode assembly from the burner.

Fit the replacement electrode in the reverse order, checking that the spark gap is 3 to 4mm.

10. Flame Sensor. Refer to Fig. 32.
Remove the burner as described in Sections 15.3, h and 16.4.7.
Undo the M3 screw and remove the sense electrode from the burner.
Fit the replacement electrode in the reverse order, checking that the sense gap is 5 to 6mm.

11. Gas Valve. Refer to Fig. 28.
Check that the electricity and gas supplies to the appliance are turned off.
Hinge down the facia panel into the servicing position as described in Section 15.3, c.
Remove the air pressure switch bracket as described in Section 16.4. 2.
Undo the two G¾ inch nuts on the gas valve and the two M4 screws on the gas valve bracket and withdraw the valve.
Whilst supporting the valve carefully pull off the three electrical solenoid plug connections.
Fit the replacement gas valve in the reverse order ensuring the sealing washers are correctly fitted.
Turn on the gas supply and check for soundness.

To set the burner pressure. Refer to Fig. 28.
The minimum and maximum burner pressure must be set after a new gas valve has been fitted.
Follow the procedure described in Section 13.4 - Appliance Operation.
The minimum burner pressure must be set first since maximum is adjusted simutaneously.
Start the appliance in the domestic hot water mode as described in Section 13.4. - Appliance Operation.
Turn the gas mode switch on the rear of the facia to minimum. Refer to Fig. 26.
Adjust the minimum pressure screw on the gas valve to give a burner pressure of 1.5mbar (24CDi) or 1.0mbar (28CDi) or 3.1 mbar (35CDi II) for natural gas or 5.4mbar (24CDi) or 3.8mbar (28CDi) or 3.1mbar (35CDi II) for propane.
Turn the gas mode switch on the rear of the facia to maximum.
Adjust the maximum pressure screw on the gas valve to give a burner pressure of 14.8mbar (24CDi) or 15.5mbar (28CDi) or 13.5mbar (35CDi II) for natural gas or 35.5mbar (24CDi) or 35.5mbar (28CDi) or 34.7mbar (35CDi II) for propane.
Turn the gas mode switch on the rear of the facia to normal.
After completing the adjustments, check the minimum and maximum pressures and adjust as necessary.
28CDi/35CDi II ONLY: Ensure the appliance lights in the central heating mode. Turn the CH pressure adjuster on the rear of the control board (Fig. 26) fully clockwise, wait until the pressure stops increasing and then **slowly** turn it anti-clockwise until the burner pressure is 10.8mbar natural gas or 24.3mbar propane for 28CDi or 8mbar natural gas or 21.3mbar propane for 35CDi II.
After completing the adjustments, check the minimum and maximum pressures and adjust as necessary.
It should not be necessary to alter the central heating potentiometer setting when the gas valve only is replaced and the minimum and maximum pressures are set.

Fig. 36. Appliance Components (lower assembly)

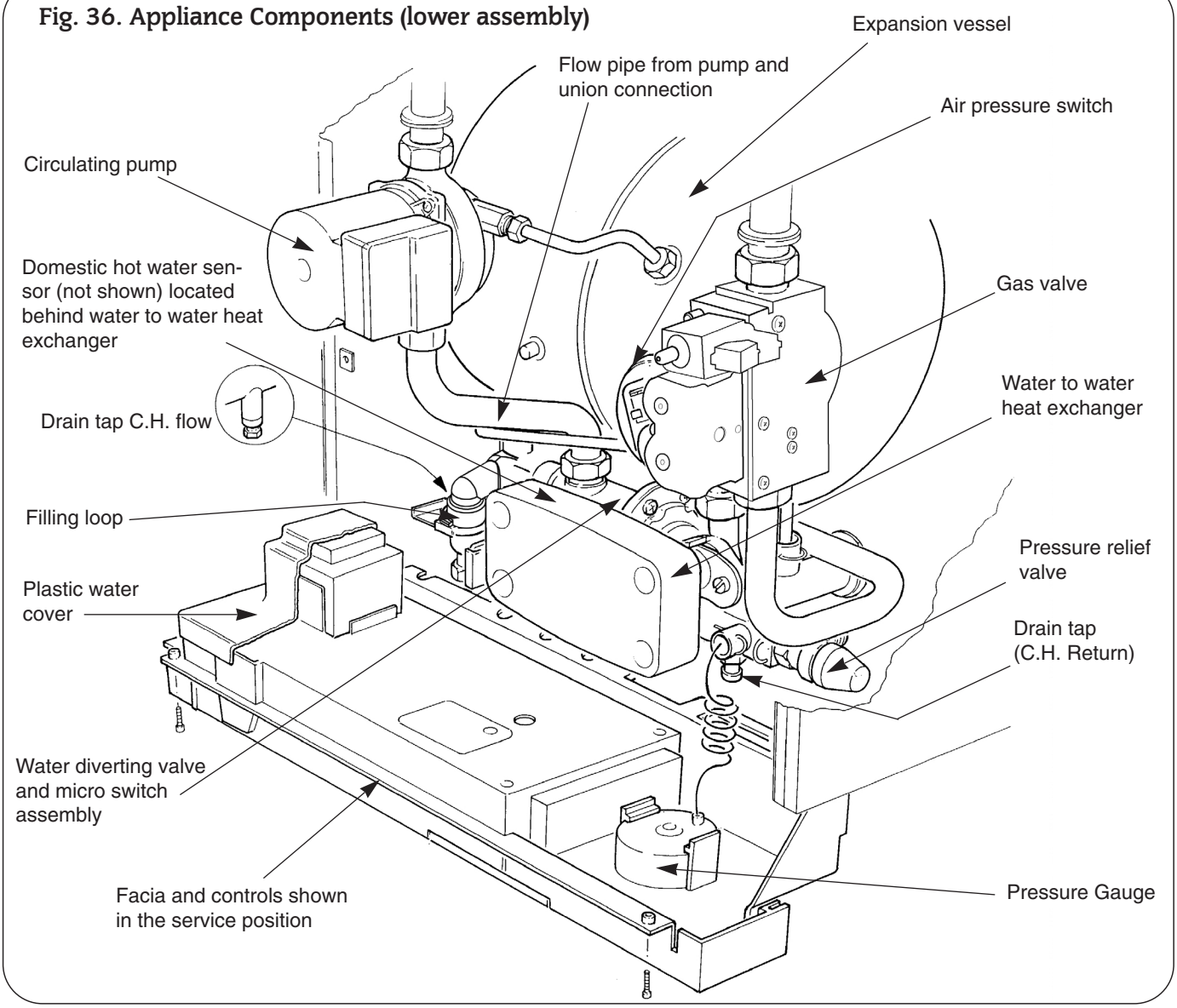

12. Central Heating Sensor. Refer to Fig. 34.
Remove the inner casing cover as described in Section 15.3, b.
Check that the electricity supply to the appliance is turned off.
Carefully pull off the two leads from the sensor.
Pull off the sensor and spring retaining clip from the pipe.
Fit the replacement sensor in reverse order with a layer of heat sink compound between the faces. Refit the leads.

13. Domestic Hot Water Sensor. Refer to Fig. 39.
Check that the electricity supply to the appliance is turned off.
Hinge the facia panel into the servicing position as described in Section 15.3, c.
Carefully pull off the two leads from the sensor.
Undo and remove the screw, pull off the sensor and spring retaining clip from the pipe.
Fit the replacement sensor in the reverse order ensuring a layer of heat sink compound is between the faces. Refit the leads.

14. Circulating Pump. Refer to Fig. 37.
Check that the electricity supply to the appliance is turned off.
Drain the central heating circuit as described in Section 16.3, a.
Hinge the facia panel into the servicing position as described in Section 15.3, c.
Undo the two union nuts and the pipe to the expansion vessel, remove the pump from the pipe-work. Support the pump and remove the electrical cover.
Disconnect the electrical wires taking note of their positions.
Fit the replacement pump in the reverse order using new sealing washers.
Alternatively replace the pump head only by removing the four Allen screws on the pump, remove the head and support whilst removing the electrical connections. Refit the new head.
Open the valves and fill and re-pressurise the system as described in Section 13.2.
NOTE: The direction of flow should be downwards. The speed should always be set to maximum.

Fig. 37. Circulating pump

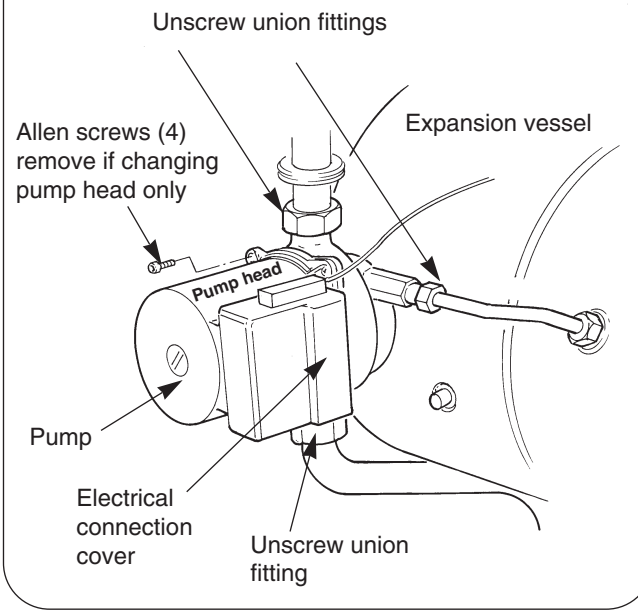

15. Pressure Relief Valve. Refer to Fig. 36.
Drain the central heating circuit as described in Section 16.3, a.
Hinge down the facia panel as described in Section 15.3, c.
Remove the bottom panel as described in Section 15.3, d.
Pull out the retaining clip and remove the pressure gauge connection. Undo the discharge pipe connection and remove the valve taking care not to distort the pipework.
Fit the replacement valve in reverse order. Reconnect the discharge pipe.
Open the valves and fill and re-pressurise the system as described in Section 13.2.

Fig. 38. Expansion Vessel

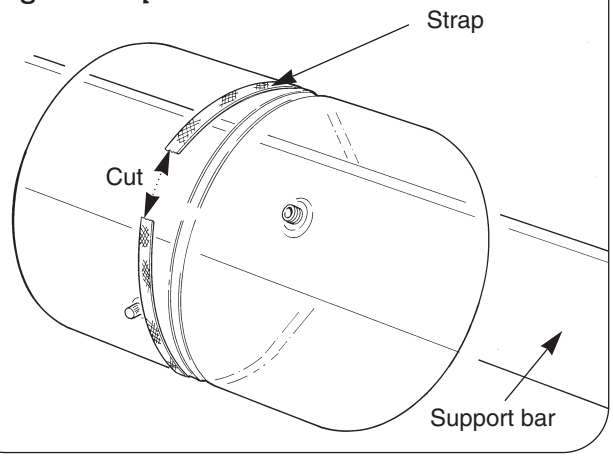

16. Expansion Vessel. Refer to Fig. 38.
Drain the central heating circuit as described in Section 16.3, a.
Hinge the facia panel into the servicing position as described in Section 15.3, c.
Remove the air pressure switch, gas to water heat exchanger, water to water heat exchanger and pump as described in 16.4, 2, 5, 14 and 20 and remove the vessel.
Fit the replacement vessel in the reverse order.
Open the valves and fill and re-pressurise the system as described in Section 13.2

17. Water Diverting Valve Micro Switch Assembly.
Refer to Fig.39.
Check that the electricity supply to the appliance is turned off.
Hinge down the facia panel as described in Section 15.3, c.
Remove the bottom panel as described in Section 15.3, d.
Using a pair of fine nosed pliers, pull the circlip off and remove the micro switch assembly from the valve. Remove the black cover and carefully pull off the connections from the terminals on the micro switches.
Withdraw the switch assembly from the appliance.
Fit the replacement micro switch assembly in the reverse order.

Fig.39. Water Diverting Valve and Micro Switch Assembly.

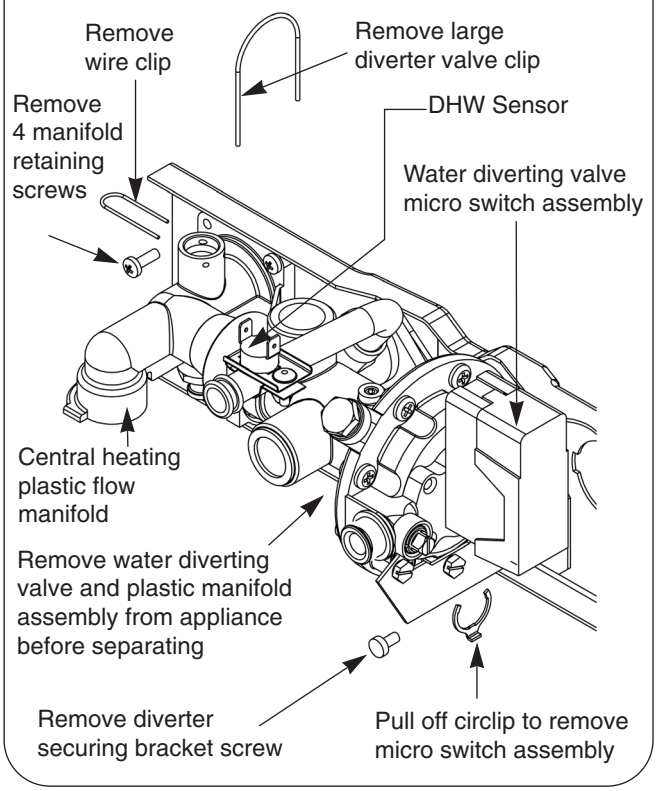

18. Water Diverting Valve. See Fig. 36, 40.
Check that the electricity supply to the appliance is turned off.
Drain the central heating and domestic hot water circuits as described in Sections 16.3, a and b.
Hinge down the facia panel into the Servicing Position as described in Section 15.3, c.
Remove the bottom panel, filling loop, water to water heat exchanger and micro switch assembly as described in Section 15.3, d, and Sections 16.4.17, 20 and 22.
Pull off the large wire clip locating the water diverting valve to the central heating plastic flow manifold on the left hand side of the appliance.
Remove the wire clip securing the copper by-pass pipe to the flow manifold.
Retain the wire clips.
Carefully ease the by-pass pipe out of the manifold and allow the pipe to swing forwards to clear the manifold connection.
Remove the screw securing the bracket, located at the right hand end of the water diverting valve, to the appliance casing.
Remove the four screws located at the left hand side securing plastic manifold to the appliance.
Remove the water diverting valve and plastic manifold assembly clear of the appliance.
Ease the water diverting valve out of the plastic manifold.
Remove the securing bracket from the valve and the water filter from the valve cold water inlet.
Retain the plastic manifold, fixing screws, support bracket and water filter.
Discard the water diverting valve.
Reassemble the original support bracket, water filter and new 'O' ring seals to the replacement valve.
Lubricate the 'O' ring seal and push the plastic flow manifold onto the valve.
Reassemble the water diverting valve and plastic manifold assembly to the appliance in the reverse order.
Ensure all 'O' ring seals and fibre washers are renewed and replaced correctly and the 'O' rings are lubricated.
Reassemble the appliance in the reverse order.
Open the valves and fill and re-pressurise the system as described in Section 13.2.

19. Inlet Water Filter. See Fig. 40.
Check that the electric supply to the appliance is turned off.
Drain the central heating and domestic circuits as described in Sections 16.3, a and b.
Hinge down the facia panel into the servicing position as described in Section 15.3, c.
Follow the proceedures as described in Section 16.4,18 and remove the water divering valve from the appliance.
Remove the water filter from the cold water inlet.
Discard or clean the filter.
Fit the replacement filter (push fit) in the reverse order.
Reassemble the appliance in the reverse order.
Open the valves and fill and re-pressurise the system as described in Section 13.2.

20. Water to Water Heat Exchanger. Refer to Fig. 40.
Check that the electricity supply to the appliance is turned off.
Drain the central heating and domestic hot water circuits as described in Sections 16.3, a and b.
Hinge down the facia panel into the servicing position as described in Section 15.3, c.
Remove the bottom panel as described in Section 15.3, d.
Remove the filling loop as described in Section 16.4.22. Undo the diverter valve connection. Remove the bolt and circlip and pull the heat exchanger forward and away from the appliance.
Fit the replacement heat exchanger in the reverse order.
Open the valves and fill and re-pressurise the system as described in Section 13.2.

21. Domestic Hot Water Flow Regulator. Refer to Fig. 40.
Remove the water to water heat exchanger assembly as described in Section 16.4.20.
The plastic flow regulator is located within the brass housing on the heat exchanger.

Regulator size:

24CDi	9 l/min	white
28CDi	10 l/min	blue
35CDi II	12 l/min	red

Fit the replacement flow regulator and reassemble in the reverse order ensuring the fibre washers and 'O' rings are in place.

Fig. 40 Filling Loop, Water to Water Heat Exchanger and Domestic Hot Water Flow Regulator

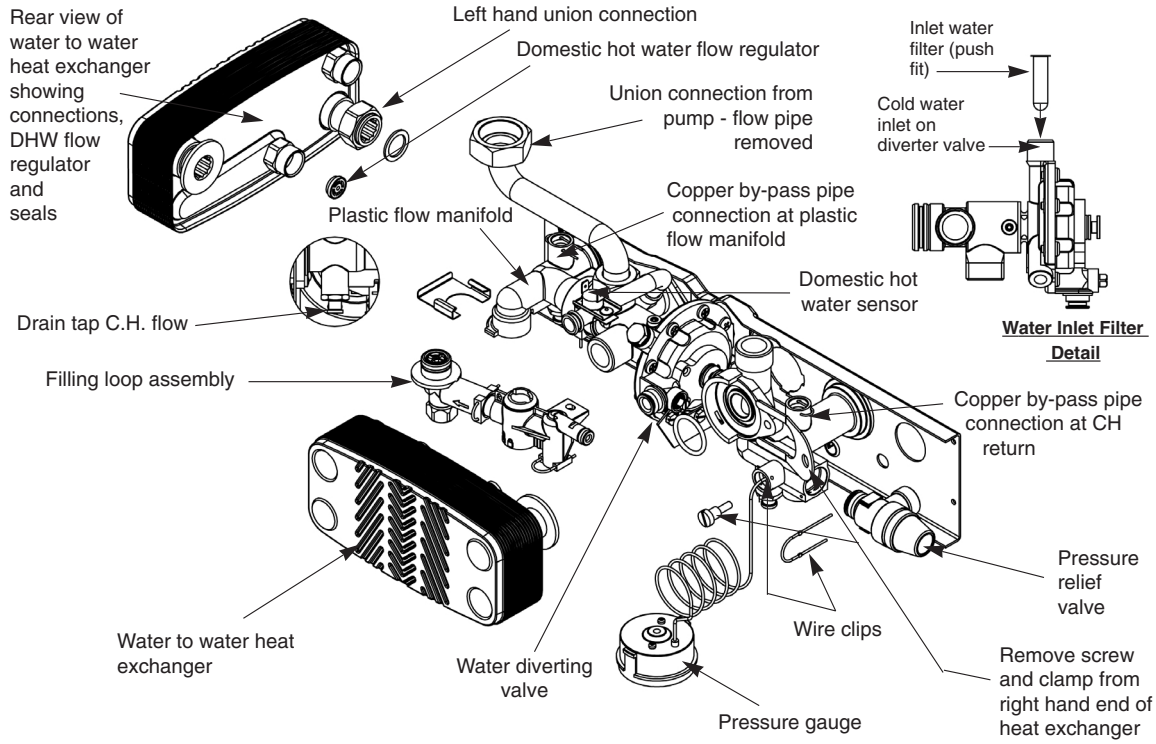

22. Filling Loop. Refer to Fig. 40.
Check that the electricity supply to the appliance is turned off.
Drain the central heating circuit as described in Section 16.3, a.
Hinge down the facia panel into the servicing position as described in Section 15.3, c.
Remove the screw securing the filling loop to the underside of the water diverting valve.
Remove the clip retaining the filling loop to the plastic flow manifold.
Remove the wire clip joining the two sections of the filling loop and slide the air gap section in the direction of the arrow.
Remove from the appliance.
Fit the replacement assembly in the reverse order not forgetting the 'O'ring between the flow manifold and filling loop joint.

23. Control Board. See Fig.41.
Check that the electricity supply to the appliance is turned off.
Remove the three screws fixing the facia bottom panel to the facia.
Remove the facia bottom panel. Retain the panel and screws.
Carefully pull off all the connectors. Disconnect the mains supply lead at terminal ST 12 and the earth connection at the back.
Pull off the three plastic control knobs. Take care not to damage the knobs when pulling off.
Retain the knobs.
Hinge down the facia panel into the servicing position as described in Section 15.3, c.
Remove the plastic water cover.
Remove the four corner screws on the back of the facia and separate the metal back panel from the plastic facia.
Ease off the two spark electrode lead connections.
Release the plastic catch at each of the four mounting posts pulling the control board forwards approximately 3mm to prevent the plastic catch from returning.
Pull the board off the remainder of the mounting posts until it is free.
Unplug the transformer from rear of the board. Discard the control board retain the transformer.
Plug in the transformer to the replacement control board. The transformer will fit in one direction only.
Locate the replacement control board over the four mounting posts and push back squarely until the plastic catch on the end of each post clicks into place.
Reassemble in the reverse order and ensure:

i) the spark electrode leads are re-connected. Polarity is not important.
ii) the connectors are fitted to the correct terminals.

Connectors are not interchangeable and will only fit the terminals from which they were removed.
Reassemble the facia panel and facia bottom panel in the reverse order. When replacing the control knobs ensure the knob with the shortest shaft is fitted to the left hand control position.
28CDi/35CDi II ONLY: Re-check the max. CH setting pressure and adjust as described in Section 16.4.11 (to set the burner pressure).

24. Transformer. See Fig. 41.
Check that the electricity supply to the appliance is turned off.
Remove the control board as described in Section 16.4.23.
Unplug the transformer from rear of the board. Discard the transformer retain the control board.
Plug in the replacement transformer to the control board. The transformer will fit in one direction only.

25. Pressure Gauge. Refer to Figs. 40 and 41.
Check that the electricity supply to the appliance is turned off.
Drain the central heating circuit as described in Section 16.3, a.
Hinge down the facia panel into the servicing position as described in section 15.3, c.
Remove circlip and pull out the capillary sensing bulb in the return manifold.
Prise back the retaining clips securing the gauge to the facia panel and remove.
Fit the replacement gauge in the reverse order ensuring the "O" ring is in place.
Open the valves and fill and re-pressurise the system as described in Section 13.2

Fig. 41. Rear of Facia in Servicing Position, Control Board and Transformer.

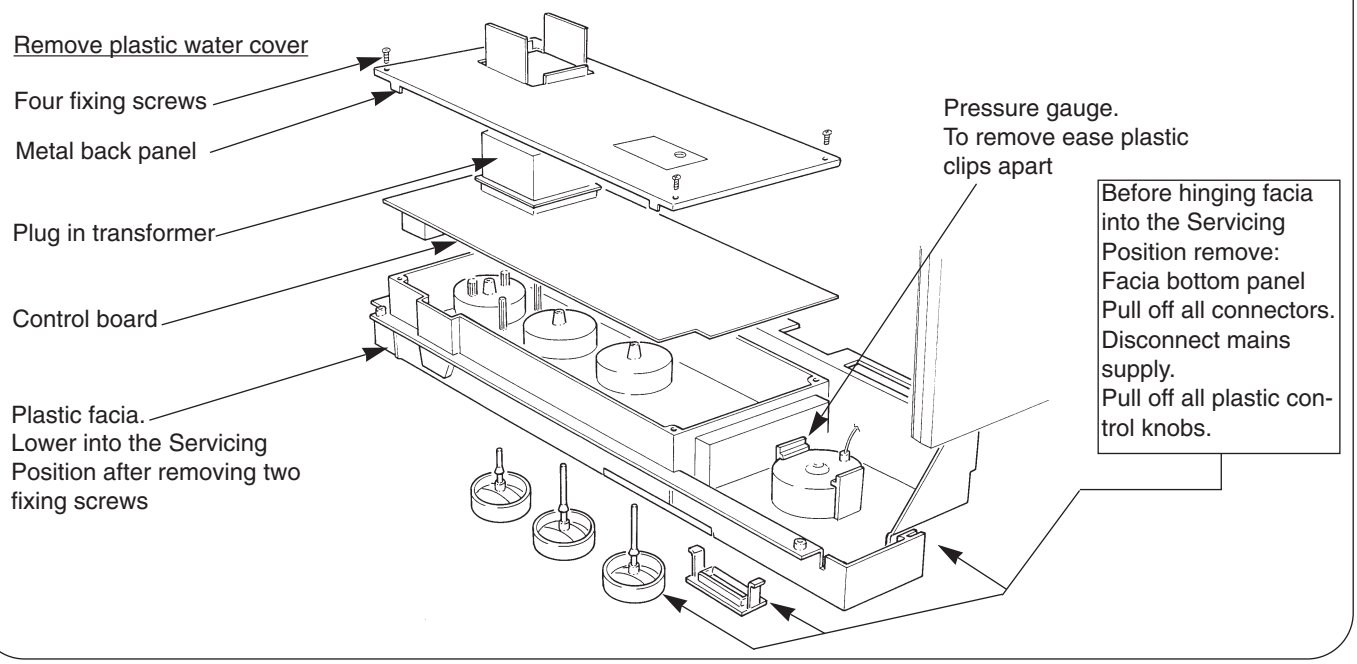

17. Short Parts List

Key No.	G.C. No.	Part	Manufacturer's Reference	Appliance			Qty	WHS Part No.
				24CDi	28CDi	35CDi II		
26	E80-450	Gas Valve – Natural Gas	Dungs BM 771 SL 040	✓	✓	✓	1	8 716 102 673 0
26	E80-451	Gas Valve – Propane	Dungs BM 771 SL 040	✓	✓	✓	1	8 716 102 868 0
78	E00-720	Burner – Natural Gas	Aeromatic, Ref. AC 23/05 3582		✓		1	8 716 142 602 0
78	E00-737	Burner – Propane	Aeromatic, Ref. AC 23/05 3585		✓		1	8 716 142 605 0
78	375 695	Burner – Natural Gas	Aeromatic, Ref. AC 23/05 3602	✓			1	8 716 105 121 0
78	173 012	Burner – Propane	Aeromatic, Ref. AC 23/05 3583	✓			1	8 716 142 600 0
78		Burner – Natural Gas	Aeromatic, Ref. AC 23/05 3598			✓	1	8 716 102 674 0
78		Burner – Propane	Aeromatic, Ref. AC 23/05 3599			✓	1	8 716 102 869 0
80	E00-721	Burner Injector – Natural Gas	Stereomatic, Type 7, Rs 1/8 4.5mm		✓		1	8 716 140 208 0
80	E00-738	Burner Injector – Propane	Stereomatic, Type 7, Rs 1/8 3.1mm		✓		1	8 716 140 222 0
80	173 091	Burner Injector – Natural Gas	Stereomatic, Type 7, 4.3mm dia.	✓			1	8 716 105 033 0
80	E00-741	Burner Injector – Propane	Stereomatic, Type 7, 2.78mm dia.	✓			1	8 716 140 209 0
80		Burner Injector – Natural Gas	Stereomatic, Type 7, 5.4mm dia.			✓	1	8 716 104 457 0
80		Burner Injector – Propane	Stereomatic, Type 7, 3.4mm dia.			✓	1	8 716 104 458 0
81	375 697	Spark Electrode Assembly	Buccleuch, Ref. BE/3462/SI	✓	✓	✓	1	8 716 142 100 0
82	E01 612	Flame Sensor + Harness	Buccleuch, Ref. BE/3461/SI	✓	✓	✓	1	8 716 120 345 0
95	299 515	Ignition Harness	Buccleuch, Ref. BE/3469/SI	✓	✓	✓	1	8 716 120 229 0
61	299 352	Gas to Water Heat Exchanger	Giannoni, Ref. PR22 323 003, D2107	✓	✓		1	8 716 142 800 0
61		Gas to Water Heat Exchanger	Giannoni, Ref. PR26 326			✓	1	8 716 102 675 0
42	299 353	Water to Water Heat Exchanger	Giannoni, Ref. PVW 12 E, D2108	✓			1	8 716 142 900 0
42	E00-711	Water to Water Heat Exchanger	Giannoni, Ref. PVW 14 E		✓		1	8 716 142 903 0
42		Water to Water Heat Exchanger	Giannoni, Ref. PVW 16E			✓	1	8 716 102 672 0
68	E00 716	Automatic Air Vent	Intermes, Ref. 02.05.010	✓	✓	✓	1	8 716 140 500 0
85	299 506	System Pressure Gauge	Cewal, spec. D2111	✓	✓	✓	1	8 716 142 300 0
40	375 699	Pressure Relief Valve	Caleffi, Ref. 312439	✓	✓	✓	1	8 716 142 404 0
29	173 006	Circulating Pump	Grundfoss, Ref. 50 50 6500	✓	✓	✓	1	8 716 143 108 0
25	173 001	Expansion Vessel	Zilmet, Ref. 301010	✓	✓	✓	1	8 716 142 500 0
34	173 005	Diverter Valve	Giannoni, Ref. V37/OM/I/F/4/A	✓	✓	✓	1	8 716 156 746 0
104	394 291	DHW Flow Regulator	Type E – Blue 10 Litre		✓		1	8 716 141 057 0
104	379 215	DHW Flow Regulator	Type E – White 8 Litre	✓			1	8 716 141 054 0
104		DHW Flow Regulator	Type E – Red 12 Litre			✓	1	8 716 141 061 0
105	378 416	Domestic Water Filter	MPM, V3326	✓	✓	✓	1	8 716 148 400 0
109	E01-840	Charging Link Assembly		✓	✓	✓	1	8 716 120 320 0
84	E00-722	Circuit Board	Bosch, Type Heatronic II 282		✓		1	8 748 300 276 0
84	173 013	Circuit Board	Bosch, Type Heatronic II AE	✓			1	8 748 300 219 0
84		Circuit Board	Bosch, Type Heatronic			✓	1	8 748 300 430 0
96	299 516	Transformer	ERA, Ref. BV 066-0188.0	✓	✓	✓	1	8 747 201 248 0
65	E00-716	Fan Assembly	WHS		✓		1	8 716 120 282 0
65	299 497	Fan Assembly – RSF	Sifan, REF. FFB.0226-016	✓			1	8 716 120 034 0
65		Fan Assembly	Fime GRO 1165			✓	1	8 716 102 587 0
66	299 363	Air Pressure Sensing Probe	WHS	✓	✓	✓	1	8 716 141 000 0
129	E00-730	Differential Air Pressure Switch	Huba, Ref. 605.99482		✓		1	8 716 146 153 0
129	173 016	Differential Air Pressure Switch – RSF	Huba, Ref. 605.99487	✓			1	8 716 142 406 0
129		Differential Air Pressure Switch	Huba, Ref. 605			✓	1	8 716 104 461 0
60	375 696	Thermister Sensor	Elmwood, Ref. 6655 - 9003 - 5	✓	✓	✓	2	8 716 142 302 0
62	173 015	Overheat Thermostat	Elmwood, Ref. 2455 R - 98 - 789	✓	✓	✓	1	8 716 142 303 0
133	299 354	Combustion Chamber Insulation 24/28CDi	WHS	✓	✓		1	7 716 192 204 0
133		Combustion Chamber Insulation 35CDi II	WHS			✓	1	7 716 192 224 0
134	299 355	Fibre Washer Pack	WHS	✓	✓	✓	1	7 716 192 205 0
135	299 356	'O' Ring Pack	WHS	✓	✓	✓	1	7 716 192 207 0
136	299 357	Fuse Pack	WHS	✓	✓	✓	1	7 716 192 206 0

Accessories

Part	WHS Part No.
Horizontal Telescopic Flue Kit	7 716 191 068
Flue Duct Extension Kit	7 716 191 006
Vertical Balanced Flue Kit & Terminal	7 716 191 079
Vertical Flue Adaptor	7 716 191 016
Digital Single Channel Programmer	7 716 192 003
Mechanical Single Channel Programmer	7 716 192 002
Digistat CD (Radio Controlled Room Thermostat)	7 716 192 006
Wall Spacing Frame 24/28CDi	7 716 192 111
Wall Spacing Frame 35CDi II	7 716 192 278
90° Flue Elbow (One)	7 716 191 013
45° Flue Elbow (Pack of Two)	7 716 191 014
Mini Expansion Vessel	7 716 192 105
Internal Flue Fixing Kit	7 716 191 018
Pre-System Filling Kit	7 716 192 102

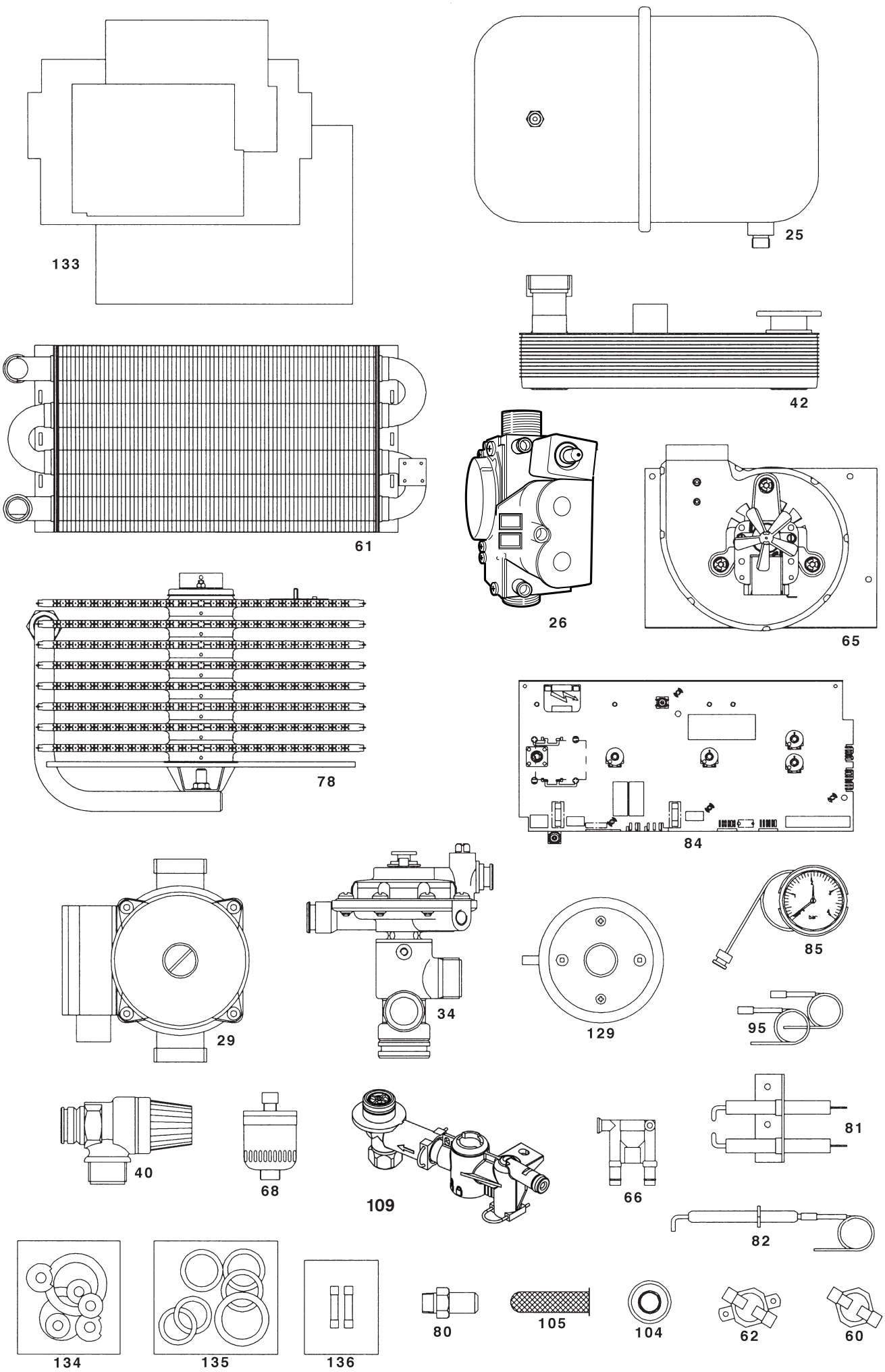
133
25
42
61
26
65
78
84
29
34
129
85
95
40
68
109
66
81
82
134
135
136
80
105
104
62
60

18. Operational Flow Diagrams

CENTRAL HEATING FUNCTION

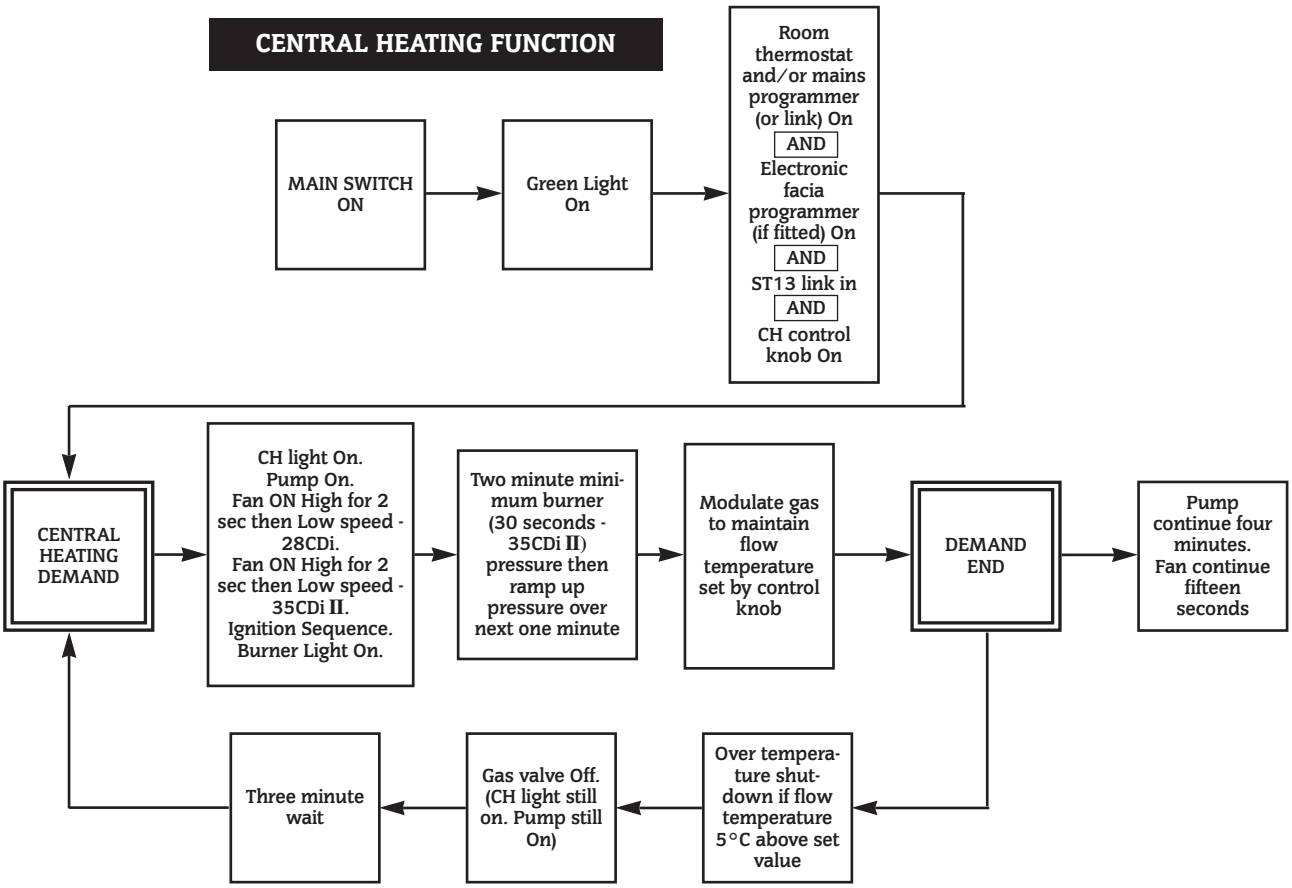

DOMESTIC HOT WATER FUNCTION

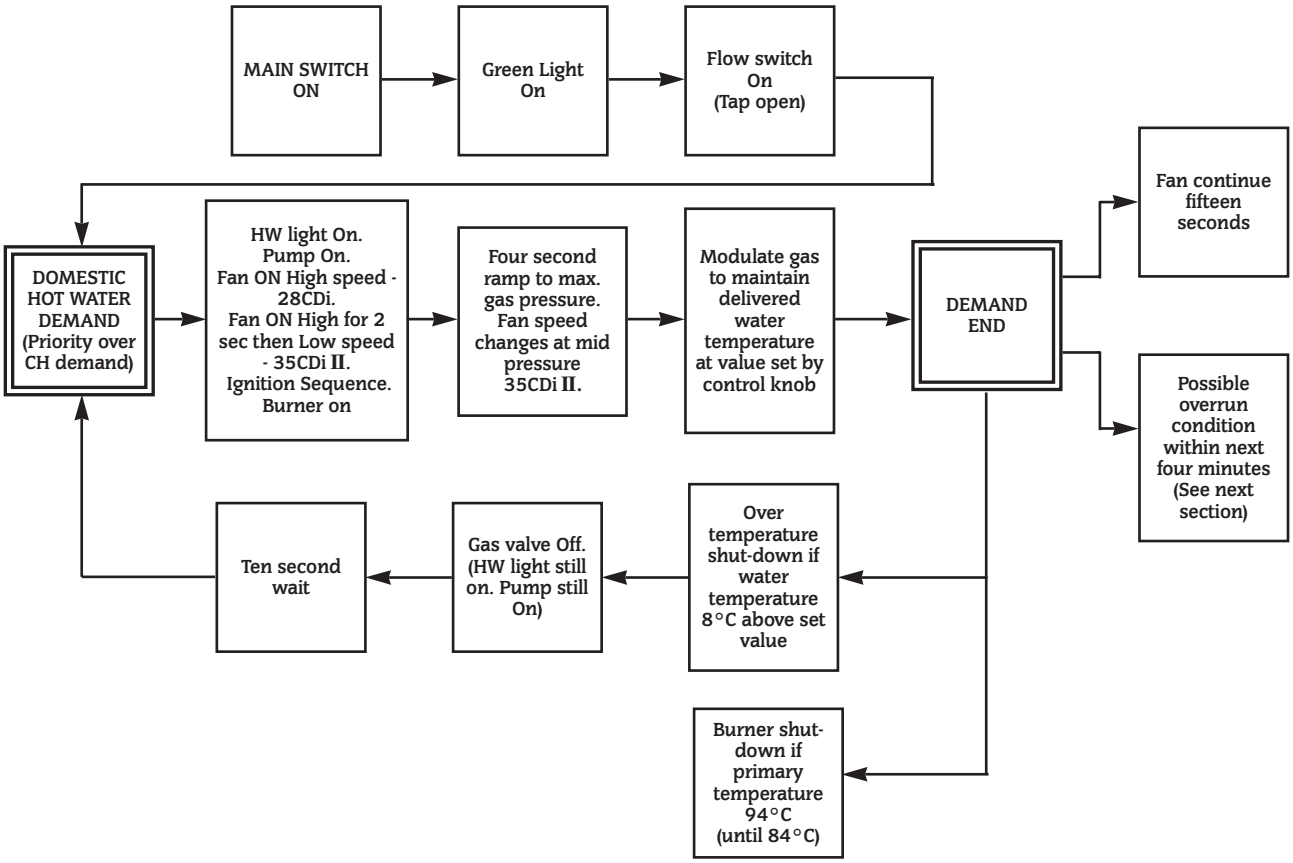

OVERRUN FUNCTION

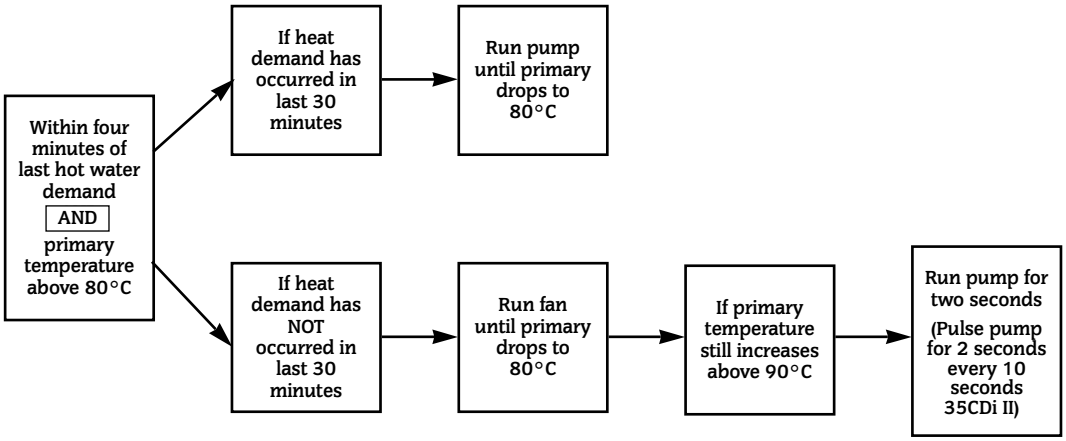

AUTOFROSTAT FUNCTION

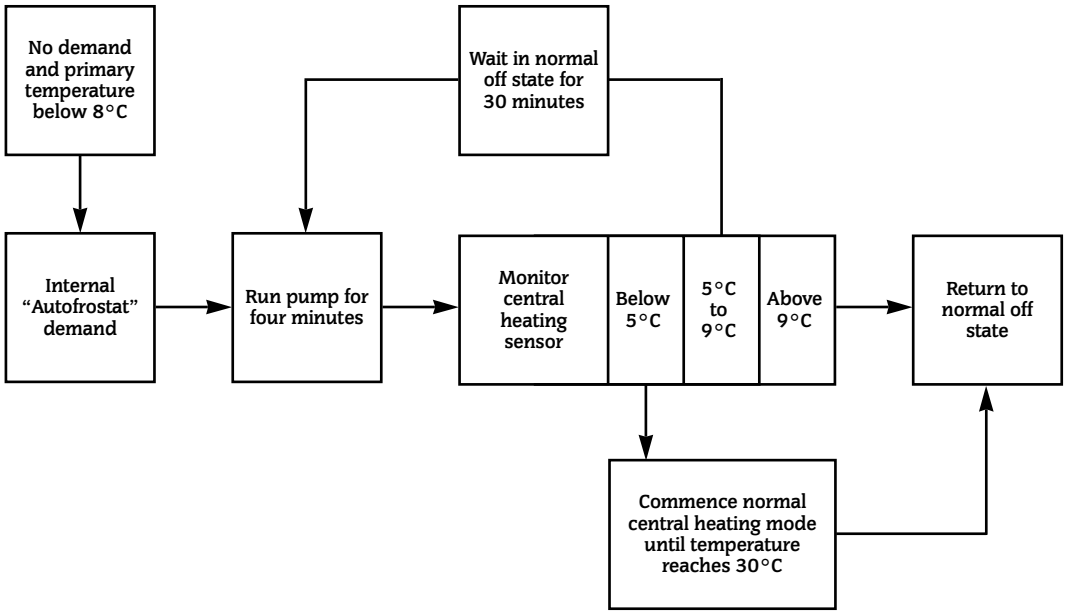

19. Fault Finding

Note: This fault-finding information is for guidance only. Worcester Heat Systems cannot be held responsible for costs incurred by persons not deemed to be competent.

The electronic control system for this boiler incorporates four lights on the facia. These are used to show normal operating status. But as a secondary function, by flashing, they can also be used to help provide fault diagnostics. Therefore, with individual or groups of lights being permanently off, on or flashing, every normal fault can be identified.

To use the fault finding system, select a box below which represents the light situation during your fault. Then refer to the appropriate following section. This fault-finding system assumes that the appliance has been operating correctly until the time of failure.

PRELIMINARY CHECKS

Preliminary electrical system checks are the first electrical checks to be carried out during a fault-finding procedure. On completion of the Service/Fault-Finding task which has required the breaking and remaking of electrical connections, check (a) EARTH CONTINUITY, (b) SHORT CIRCUIT CHECK, (c) POLARITY and (d) RESISTANCE TO EARTH.

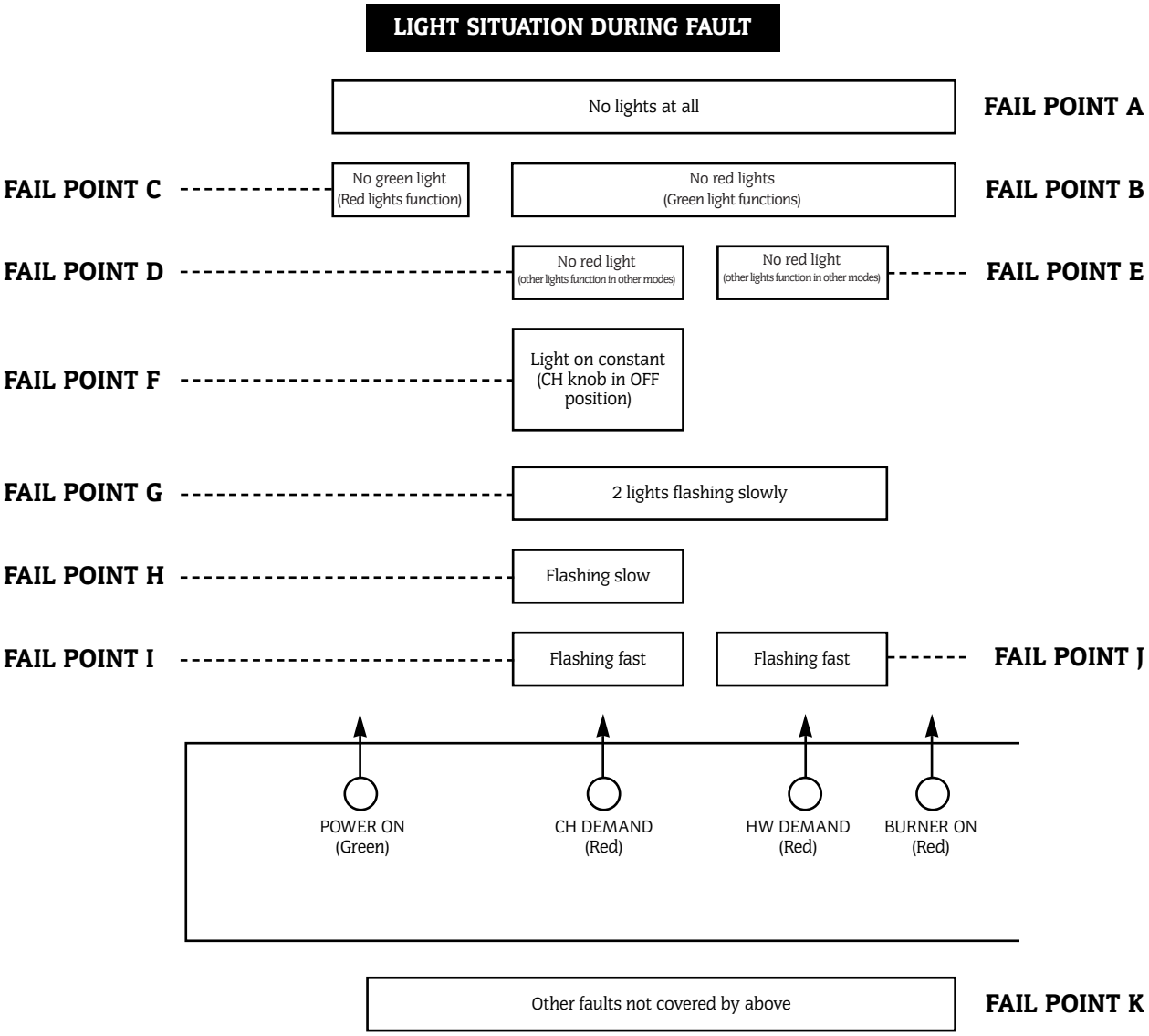

Note:

Slow flash is once per second, fast flash is five times per second.

Slow flash can only be cleared by using the facia reset button (press for at least one second).

Fast flash is cleared by removing fault and/or main switch off/on.

FAIL POINT A

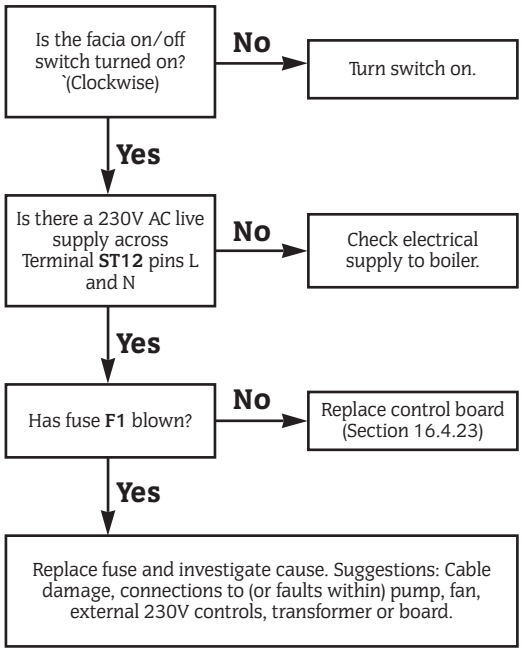

FAIL POINT B

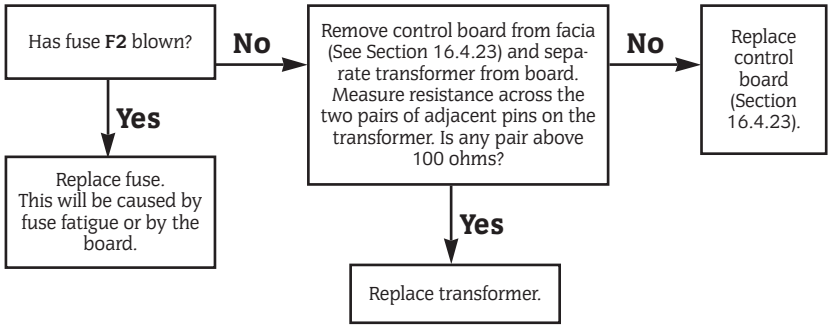

FAIL POINT C

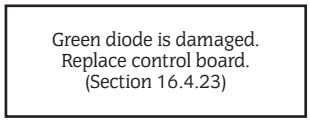

FAIL POINT D

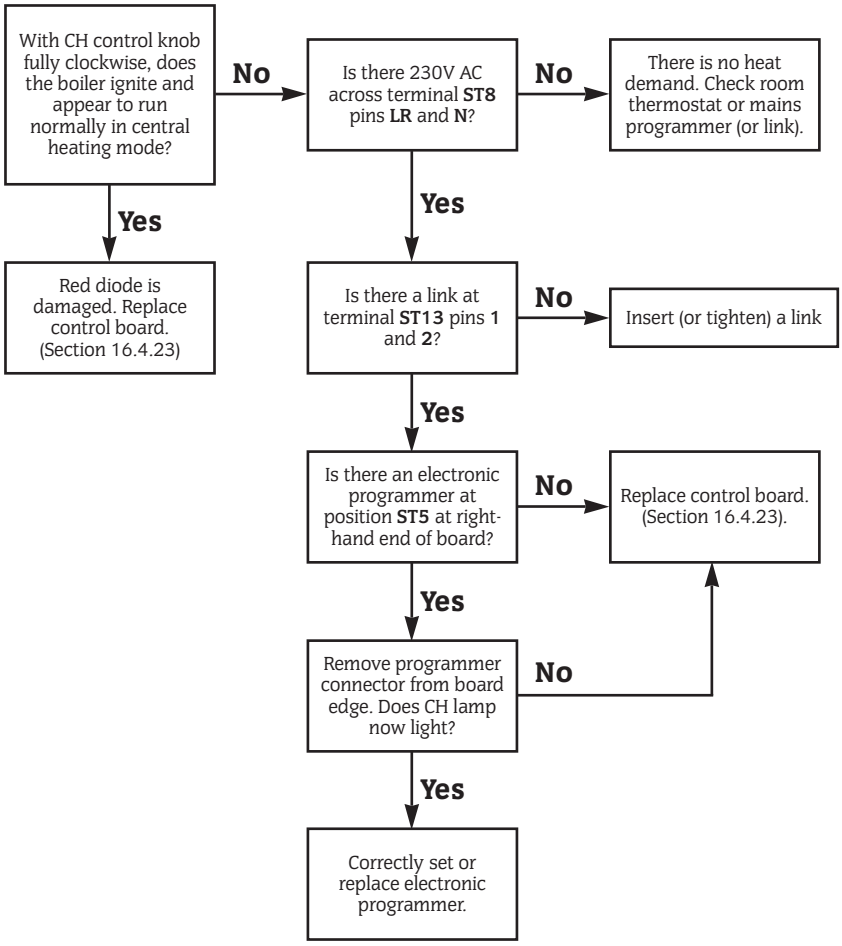

FAIL POINT E

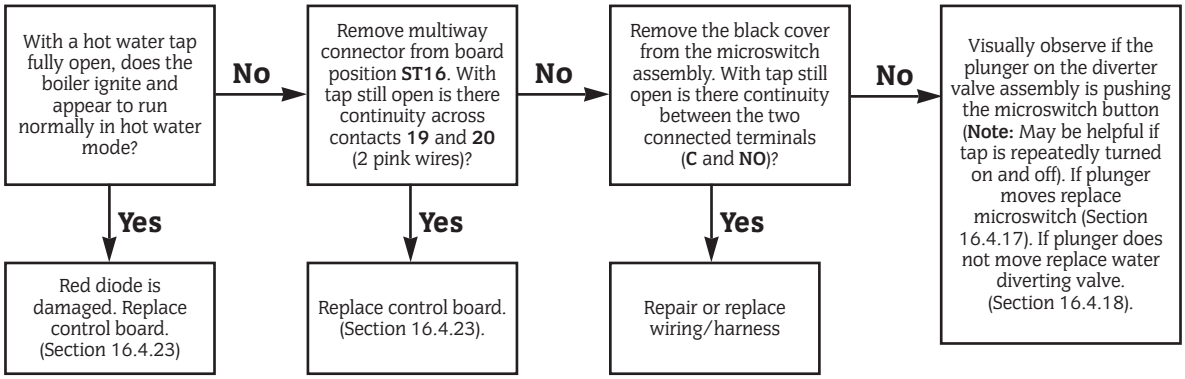

FAIL POINT F

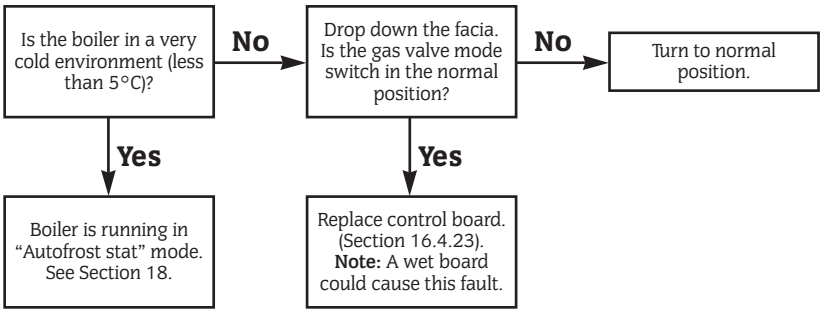

FAIL POINT G "Primary Overheat"

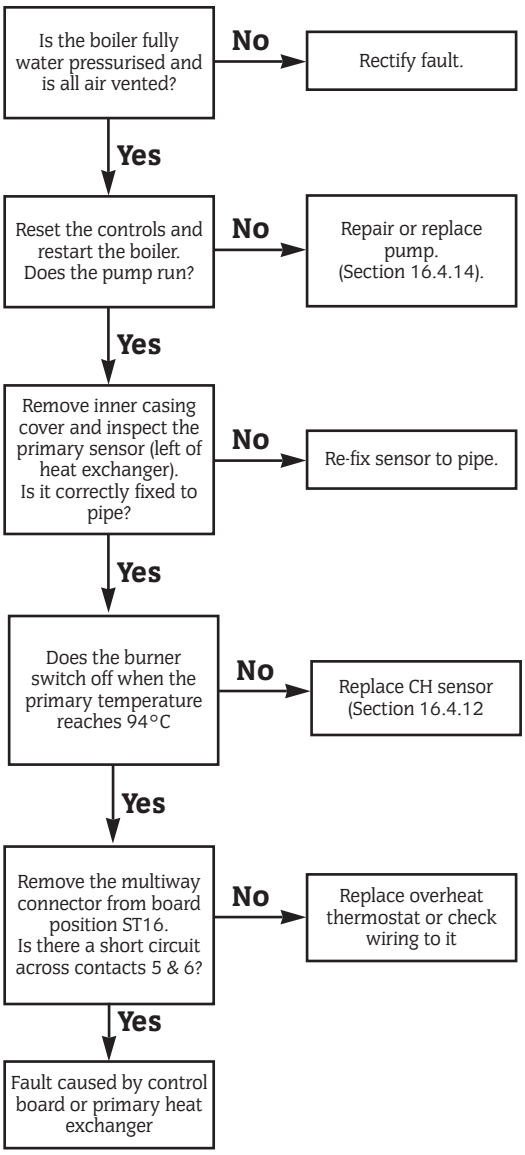

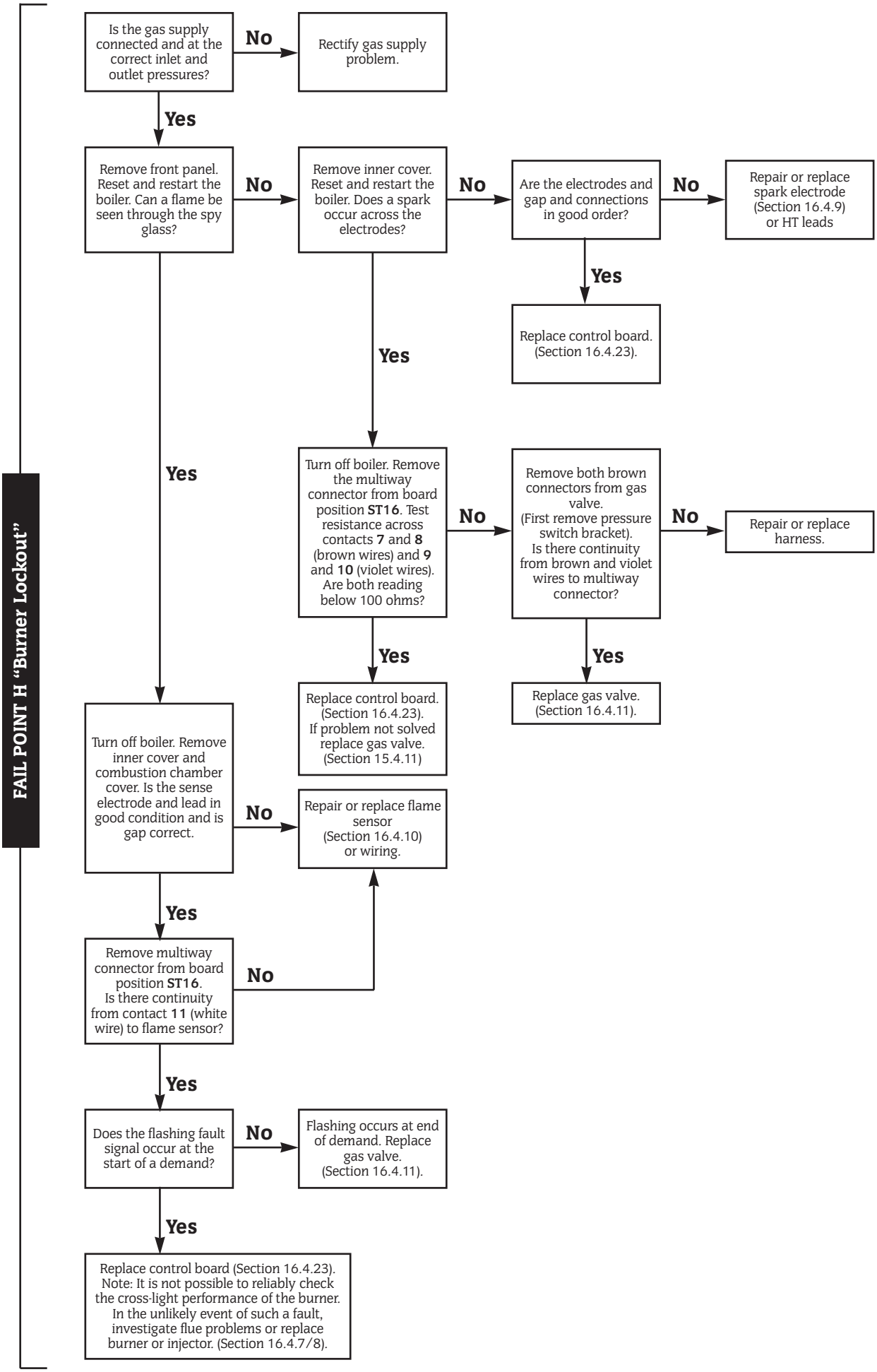
FAIL POINT H "Burner Lockout"
Is the gas supply connected and at the correct inlet and outlet pressures?
No
Rectify gas supply problem.
Yes
Remove front panel. Reset and restart the boiler. Can a flame be seen through the spy glass?
No
Remove inner cover. Reset and restart the boiler. Does a spark occur across the electrodes?
No
Are the electrodes and gap and connections in good order?
No
Repair or replace spark electrode (Section 16.4.9) or HT leads
Yes
Replace control board. (Section 16.4.23).
Yes
Yes
Turn off boiler. Remove the multiway connector from board position ST16. Test resistance across contacts 7 and 8 (brown wires) and 9 and 10 (violet wires). Are both reading below 100 ohms?
No
Remove both brown connectors from gas valve. (First remove pressure switch bracket). Is there continuity from brown and violet wires to multiway connector?
No
Repair or replace harness.
Yes
Replace control board. (Section 16.4.23). If problem not solved replace gas valve. (Section 15.4.11)
Yes
Replace gas valve. (Section 16.4.11).
Turn off boiler. Remove inner cover and combustion chamber cover. Is the sense electrode and lead in good condition and is gap correct.
No
Repair or replace flame sensor (Section 16.4.10) or wiring.
Yes
Remove multiway connector from board position ST16. Is there continuity from contact 11 (white wire) to flame sensor?
No
Yes
Does the flashing fault signal occur at the start of a demand?
No
Flashing occurs at end of demand. Replace gas valve. (Section 16.4.11).
Yes
Replace control board (Section 16.4.23). Note: It is not possible to reliably check the cross-light performance of the burner. In the unlikely event of such a fault, investigate flue problems or replace burner or injector. (Section 16.4.7/8).

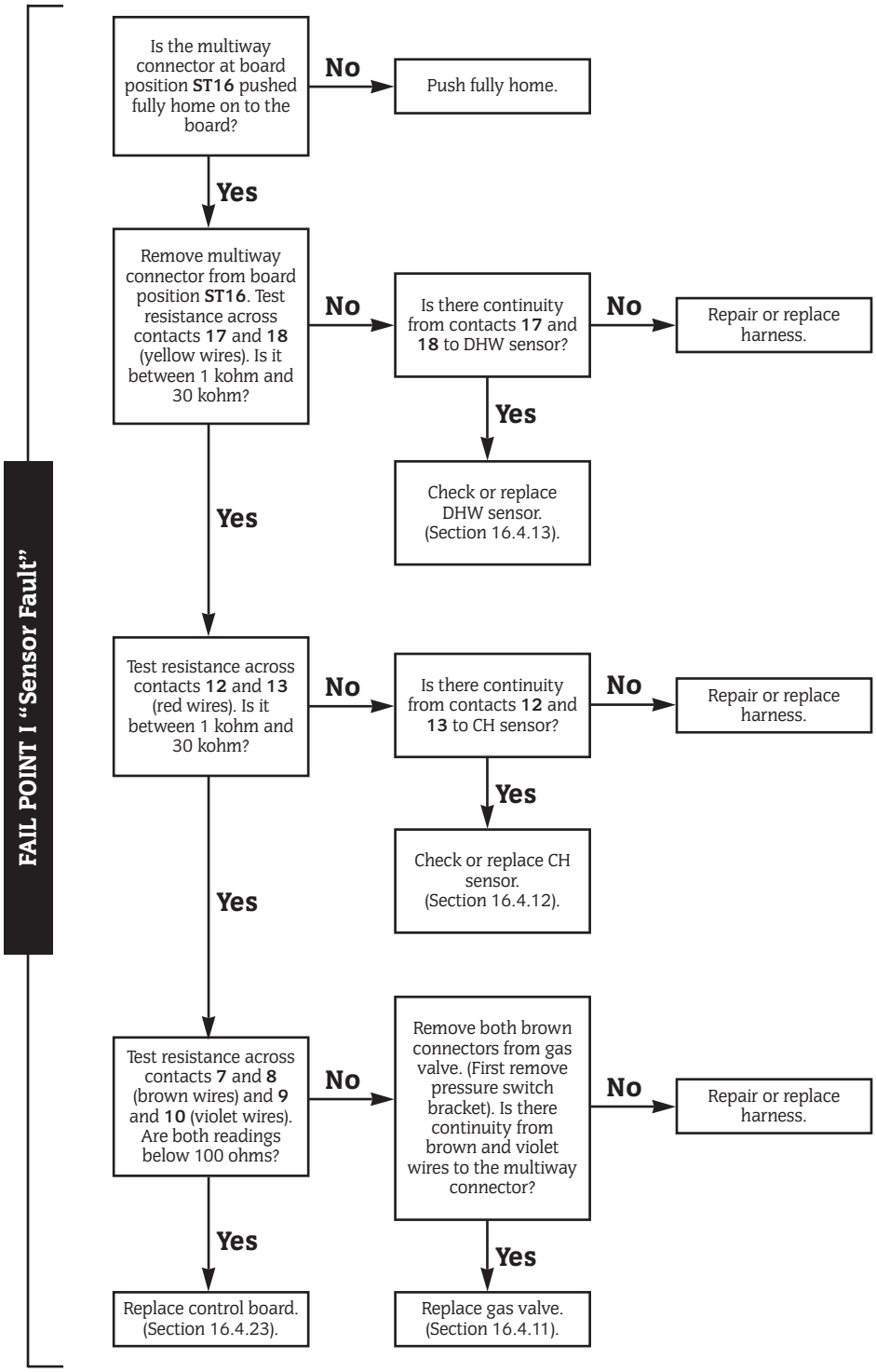
FAIL POINT I "Sensor Fault"
Is the multiway connector at board position ST16 pushed fully home on to the board?
No
Push fully home.
Yes
Remove multiway connector from board position ST16. Test resistance across contacts 17 and 18 (yellow wires). Is it between 1 kohm and 30 kohm?
No
Is there continuity from contacts 17 and 18 to DHW sensor?
No
Repair or replace harness.
Yes
Check or replace DHW sensor. (Section 16.4.13).
Yes
Test resistance across contacts 12 and 13 (red wires). Is it between 1 kohm and 30 kohm?
No
Is there continuity from contacts 12 and 13 to CH sensor?
No
Repair or replace harness.
Yes
Check or replace CH sensor. (Section 16.4.12).
Yes
Test resistance across contacts 7 and 8 (brown wires) and 9 and 10 (violet wires). Are both readings below 100 ohms?
No
Remove both brown connectors from gas valve. (First remove pressure switch bracket). Is there continuity from brown and violet wires to the multiway connector?
No
Repair or replace harness.
Yes
Replace control board. (Section 16.4.23).
Yes
Replace gas valve. (Section 16.4.11).

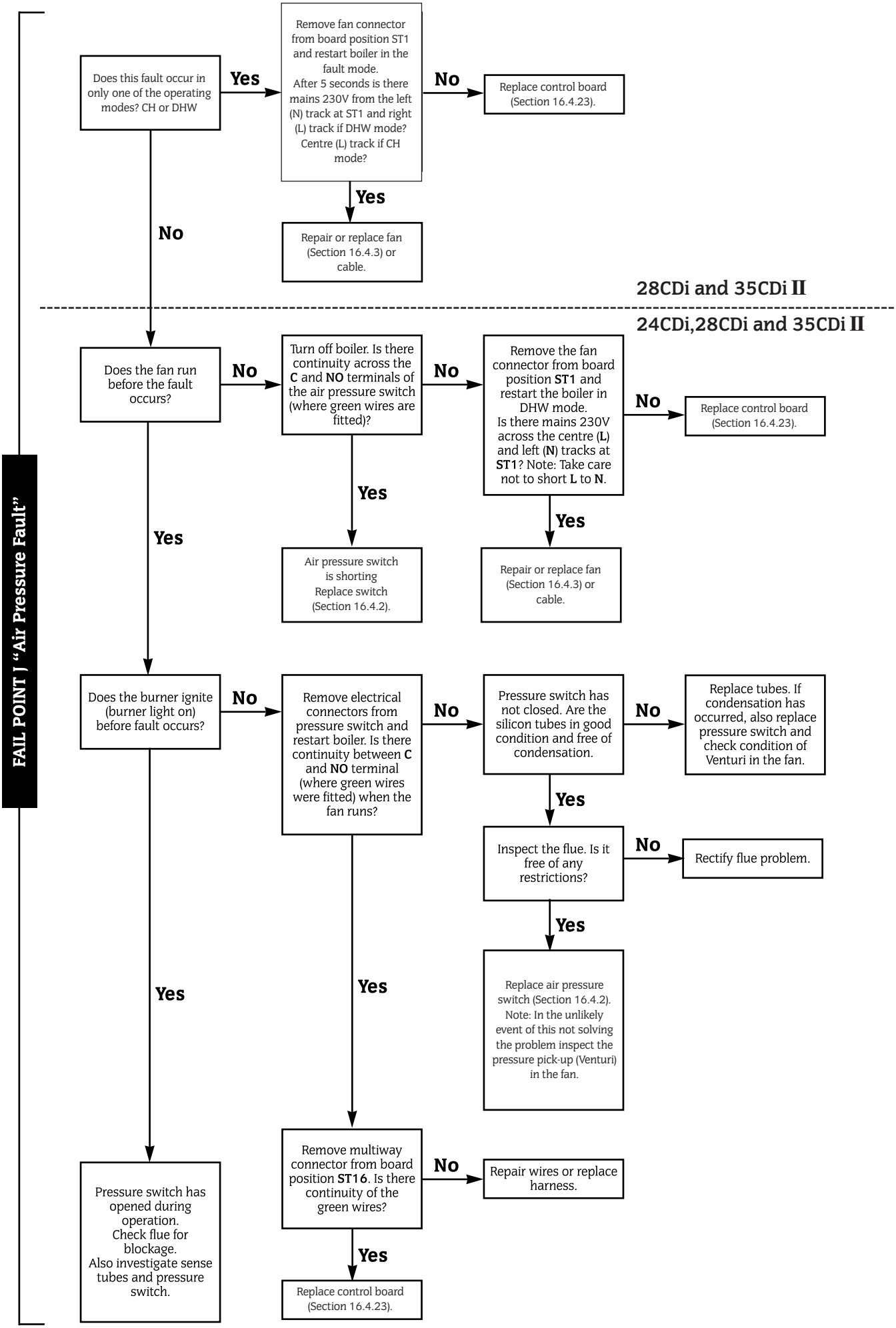
FAIL POINT J "Air Pressure Fault"
Does this fault occur in only one of the operating modes? CH or DHW
Yes
Remove fan connector from board position ST1 and restart boiler in the fault mode. After 5 seconds is there mains 230V from the left (N) track at ST1 and right (L) track if DHW mode? Centre (L) track if CH mode?
No
Replace control board (Section 16.4.23).
Yes
Repair or replace fan (Section 16.4.3) or cable.
No
28CDi and 35CDi II
24CDi,28CDi and 35CDi II
Does the fan run before the fault occurs?
No
Turn off boiler. Is there continuity across the C and NO terminals of the air pressure switch (where green wires are fitted)?
No
Remove the fan connector from board position ST1 and restart the boiler in DHW mode. Is there mains 230V across the centre (L) and left (N) tracks at ST1? Note: Take care not to short L to N.
No
Replace control board (Section 16.4.23).
Yes
Air pressure switch is shorting Replace switch (Section 16.4.2).
Yes
Repair or replace fan (Section 16.4.3) or cable.
Yes
Does the burner ignite (burner light on) before fault occurs?
No
Remove electrical connectors from pressure switch and restart boiler. Is there continuity between C and NO terminal (where green wires were fitted) when the fan runs?
No
Pressure switch has not closed. Are the silicon tubes in good condition and free of condensation.
No
Replace tubes. If condensation has occurred, also replace pressure switch and check condition of Venturi in the fan.
Yes
Inspect the flue. Is it free of any restrictions?
No
Rectify flue problem.
Yes
Replace air pressure switch (Section 16.4.2). Note: In the unlikely event of this not solving the problem inspect the pressure pick-up (Venturi) in the fan.
Yes
Yes
Remove multiway connector from board position ST16. Is there continuity of the green wires?
No
Repair wires or replace harness.
Yes
Replace control board (Section 16.4.23).
Pressure switch has opened during operation. Check flue for blockage. Also investigate sense tubes and pressure switch.

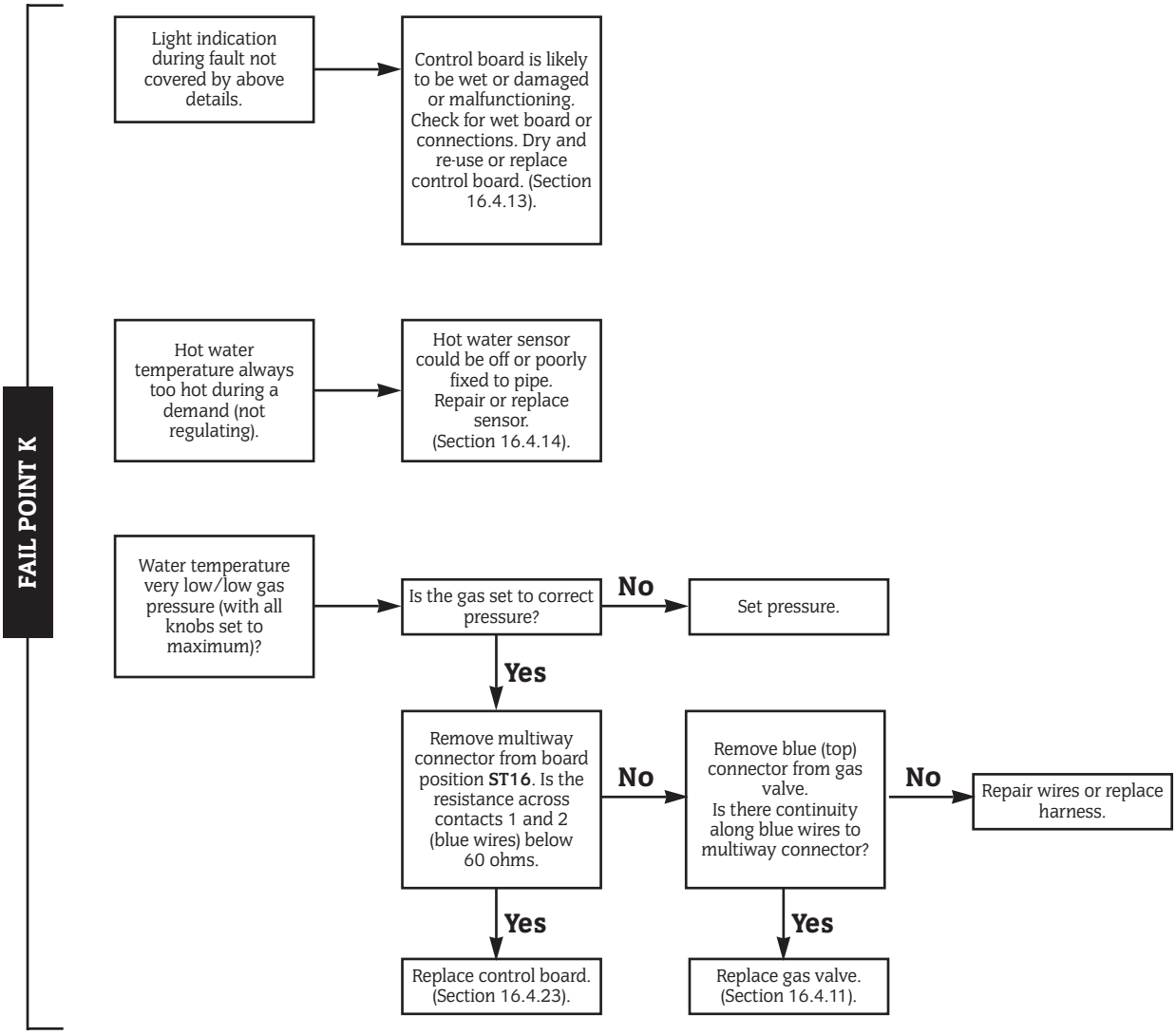
FAIL POINT K
Light indication during fault not covered by above details.
Control board is likely to be wet or damaged or malfunctioning. Check for wet board or connections. Dry and re-use or replace control board. (Section 16.4.13).
Hot water temperature always too hot during a demand (not regulating).
Hot water sensor could be off or poorly fixed to pipe. Repair or replace sensor. (Section 16.4.14).
Water temperature very low/low gas pressure (with all knobs set to maximum)?
Is the gas set to correct pressure?
No
Set pressure.
Yes
Remove multiway connector from board position ST16. Is the resistance across contacts 1 and 2 (blue wires) below 60 ohms.
No
Remove blue (top) connector from gas valve. Is there continuity along blue wires to multiway connector?
No
Repair wires or replace harness.
Yes
Replace control board. (Section 16.4.23).
Yes
Replace gas valve. (Section 16.4.11).

20. Conversion Instructions

ONLY COMPONENTS SUPPLIED BY WORCESTER HEAT SYSTEMS SHOULD BE USED.

ONLY COMPETENT PERSONNEL SHOULD ATTEMPT THE CONVERSION.

CONVERSION FROM NATURAL GAS TO LPG SHOULD NOT BE CARRIED OUT ON APPLIANCES INSTALLED IN A ROOM OR INTERNAL SPACE BELOW GROUND LEVEL

Conversion Kit LPG to NG	7 716 192 307
Conversion Kit NG to LPG	7 716 192 308

1. Ensure the gas service cock is turned **OFF** and the electrical supply is **ISOLATED**.
2. Refer to the Servicing Instructions to remove the cabinet front panel and inner casing.
3. Follow the dismantling instructions to remove the burner. Refer to Section: Inspection and Servicing.
4. Remove the injector and replace with the relevant injector from the kit. Refer to Section: Inspection and Servicing.
5. Remove the nut, end cap and bracket at the opposite end of the burner. If the conversion is LPG to NG it is necessary to remove the gauze. If the conversion is NG to LPG it is necessary to fit the gauze supplied in the kit.
6. Refit the end cap ensuring that the support bracket is in the correct orientation.
7. Remove the gas valve and replace with the gas valve supplied in the kit. Refer to Section: Replacement of Parts.
8. Re-assemble the burner and inner casing.
9. Turn on the gas and electricity supplies and follow the commissioning procedure to confirm gas soundness and correct boiler operation.
10. Check and adjust the setting pressures to the values in the table below and adjust if necessary. Refer also to the Installation and Service Instructions Section: Replacement of Parts "To Set the Burner Pressure".
11. Refit the plastic sealing cap to the gas valve modulating valve adjuster and seal with a dab of paint or similar.
12. Turn off the boiler and when cool peel off the arrow from the data plate on the combustion chamber front panel and re-stick against the gas type for which the boiler has been converted and adjusted.
13. Replace the boiler front panel.

The conversion is now complete.

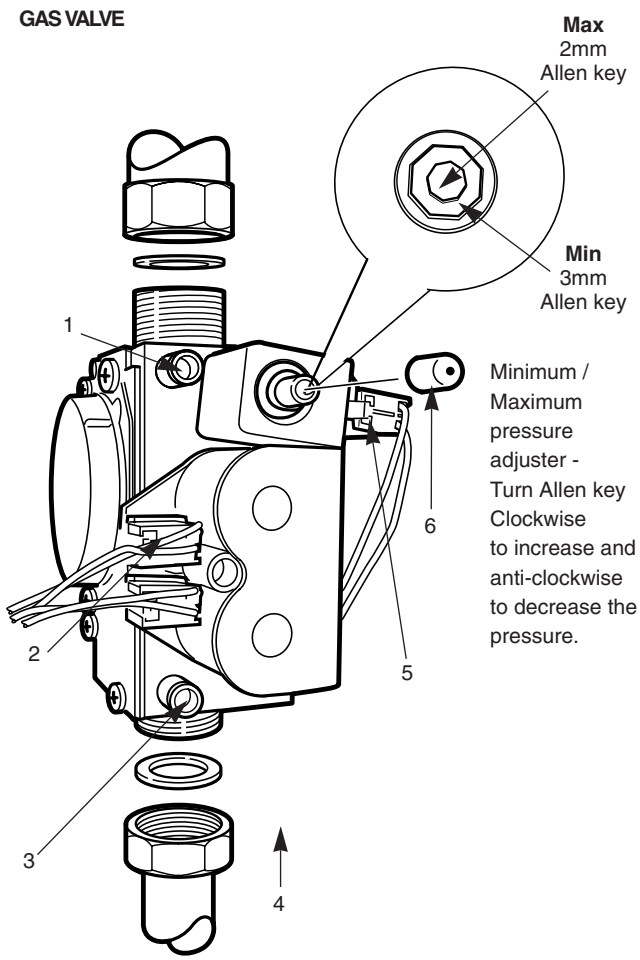

1. Burner pressure test point
2. Main gas valve connections
3. Inlet pressure test point
4. Gas valve bracket
5. Electrical connections modulator (Blue:Blue)
6. Gas valve sealing cap

NOMINAL BOILER RATINGS (10 minutes after lighting)		BOILER ADJUSTED FOR G20 (Natural Gas)			BOILER ADJUSTED FOR G31 (Propane)		
		24CDi	28CDi	35CDi II	24CDi	28CDi	35CDi II
MAX. INPUT DHW	kW	27.0	31.5	39.2	27.0	31.5	39.2
BURNER PRESSURE	mbar	14.8	15.5	13.5	35.5	35.5	34.7
MAX. INPUT CH	kW	27.0	27.0	30.1	27.0	27.0	30.1
BURNER PRESSURE	mbar	14.8	10.8	8	35.3	24.3	21.3
MIN. INPUT DHW	kW	11.4	11.4	11.9	11.4	11.4	11.9
BURNER PRESSURE	mbar	1.5	1.0	0.9	5.4	3.8	3.1

This manual is to be used in conjunction with the variant part number of the bar code below:

24CDi

8716102563

28CDi

8716102564

35CDi II

8716102651

WORCESTER

Bosch Group

Worcester Heat Systems Limited (Bosch Group), Cotswold Way, Warndon, Worcester WR4 9SW.
Telephone: 01905 754624. Fax: 01905 754619.
Technical Helpline 08705 266241.
www.worcester-bosch.co.uk

PUBLICATION 8 716 102 567j 01/03

WORCESTER

Bosch Group

24CDi BF

WALL MOUNTED COMBINATION BOILER FOR CENTRAL HEATING AND MAINS FED DOMESTIC HOT WATER

INSTALLATION AND SERVICING INSTRUCTIONS

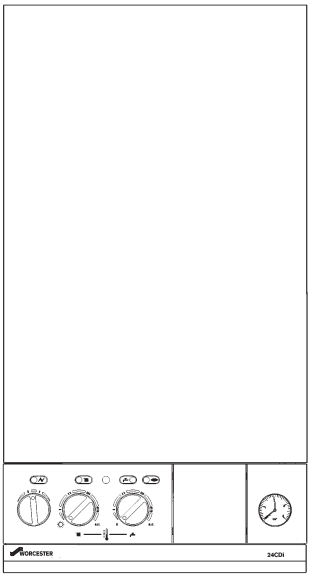

GC NUMBER 47 311 29

benchmark™

Worcester Bosch supports the Benchmark code of practice

BOILER OUTPUT

Automatic Modulating Control

To Domestic Hot Water and Central Heating

Minimum 9.0 kW

Maximum 24.0 kW

IMPORTANT: THIS APPLIANCE IS FOR USE WITH **NATURAL GAS ONLY**

THESE INSTRUCTIONS APPLY IN THE UK ONLY

THESE INSTRUCTIONS ARE TO BE LEFT WITH THE USER OR AT THE GAS METER

This appliance must be installed by a competent person in accordance with the Gas Safety (Installation and Use) Regulations 1998

Contents

1. Installation Regulations

1.1 Gas Safety (Installation & Use) Regulations 1996 (Amended 1996) : It is the law that all gas appliances are installed by a competent person in accordance with the above regulations. Failure to install appliances correctly could lead to prosecution. It is in your interest, and that of safety, to ensure compliance with the law.
1.2 The manufacturers notes must not be taken, in any way, as overriding statutory obligations.
1.3 The compliance with a British Standard or European Norm does not, of itself, confer immunity from legal obligations.
1.4 The installation of the appliance must be in accordance with the relevant requirements of the Gas Safety Regulations, current IEE Regulations, Building Regulations, Building Standards (Scotland) and local water bye-laws.
1.5 The installation should follow the recommendations of the following British Standards unless otherwise indicated:
BS6798 - Specification for the installation of gas fired hot water boilers of rated input not exceeding 60kW (Gross).
BS5449 - Central heating for domestic premises.
BS5546:1 - Installation of gas hot water supplies for domestic purposes.
BS5440/1 - Flues and ventilation for gas appliances of rated input not exceeding 60kW (Gross): Flues.
BS5440/2 - Flues and ventilation for gas appliances of rated input not greater than 60kW (Gross): Air supply.
BS6891 - Installation of low pressure gas pipework installations upto 28mm (R1).
BS6700 - Domestic water supply in buildings.
BS7593 - Water treatment in domestic heating systems.
1.6. To ensure that the installation will perform to the highest standards, the system and components should conform to any other relevant standards.
1.7. The appliance and/or components conform, where applicable, with the Essential Requirements of the Gas Appliance Directive, the Boiler Efficiency Directive, the EMC Directive and the Low Voltage Directive.
1.8. In accordance with the requirements of COSSH the appliance does not contain any substances which are harmful to health.
1.9. Product Liability regulations indicate that, in certain circumstances, the installer can be held responsible, not only for mistakes on his part but also for damage resulting from the use of faulty materials. We advise that, to avoid any risk, only quality approved branded fittings are used.
1.10. The advice and instructions given in this document covers, as far as possible, the foreseeable situations which may arise. Contact Worcester Heat Systems Technical Department, Telephone: 08705 266241, for advice on specific installations.

2. General Information

2.1. General Information
2.1.1. The appliance is set to give a maximum output of 24kW to the domestic hot water and to the heating system. The hot water flow rate is limited to a nominal 9 l/min at a maximum temperature rise of 40°C.
2.1.2. The sanitary water section of the appliance is suitable for water mains pressures of upto 10bar.
2.2 Electrical Supply
Mains supply: 230V ~ 50 Hz. 140Watts.
External fuse: 3A (BS 1362). Internal fuses: T 2A (F1), and T 1.25A (F2).
2.3 Gas Supply
The boiler requires 2.9m^3/h (100ft^3/hr) of natural gas (G20) The gas meter and supply pipes must be capable of supplying this quantity of gas in addition to the demands of any other appliances being served.
The meter governor or regulator should deliver a dynamic pressure of 20mbar (8in wg) at the appliance, which is about 18.5mb at gas valve inlet pressure test point.
The complete installation, including the gas meter, must be tested for soundness and purged. Refer to BS 6891.
2.4 Packing
The appliance and flue components are packed in separate cartons.
2.5 Installation
The appliance is suitable for indoor installations only.
An open vent feed pipe assembly kit is available.
A wall-spacing frame to allow pipe runs behind the appliance is available.
An inlet water filter is fitted to the mains cold water inlet on the appliance.
The appliance is fitted with a system filling link assembly. See Page 8
The appliance is suitable for connection to a sealed or open vented primary system.
The specified ventilation openings made into a wall or compartment door must not be obstructed.
If the appliance is to be fitted into a compartment then the compartment must conform to the requirements of BS 5440:2.
Do not place anything on top of the appliance.
The clearances specified for servicing must be maintained.
Refer to Fig. 2.
2.6 Flue
The appliance has a room-sealed balanced flue system to the rear.

The standard flue assembly length is from 225mm to 420mm.

An extension flue length from 420mm to 560mm is available.

A terminal guard, Type GC 393 545, is available from Tower Flue Components, Vale Rise, Tonbridge, TN9 1TB.

Do not allow the flue terminal fitted to the outside wall to become obstructed or damaged.

2.7 Controls

The ON/OFF switch will turn the mains electricity on and off at the appliance.

The electronic control system and gas valve modulate the heat input in response to the central heating and domestic hot water temperature settings.

The Central Heating Temperature control knob provides for the selection of domestic hot water only (turned fully anti-clockwise) or central heating and domestic hot water (turned clockwise).

The position of the Domestic Hot Water control knob will determine the temperature of the water delivered to the tap or shower or bath.

A facia mounted programmer is available as an optional extra. A remote mounted programmer may be connected to the appliance.

The integral facia displays indicate the status of the appliance.

There is provision for the connection of a mains voltage room thermostat and/or a frost thermostat.

The electronic controls prevent rapid cycling of the appliance in the central heating mode.

2.8 System Notes

IMPORTANT

Check that no dirt is left in either the gas or water pipework as this could cause damage to the appliance. Thoroughly flush the heating system and the cold water mains supply in accordance with the recommendations of BS7593: 1992.

The water pipe connections throughout a sealed system must be capable of sustaining a pressure of up to 3 bar.

Radiator valves must conform to the requirements of BS 2767:1991.

The relief valve discharge must be directed away from any electrical components or where it would cause a hazard to the user.

A drain cock to BS 2879 must be fitted to the lowest point of the system.

For circuit design purposes it is important that due note is taken of the information given in Table 3 relating to the available pump head.

2.9 Showers, Bidets, Taps and Mixing Valves

Hot and cold taps and mixing valves used in the system must be suitable for operating at the mains pressure.

Thermostatically controlled shower valves will guard against the flow of water at too high a temperature.

If a pressure equalising valve is used, set the Domestic Hot Water temperature control knob to the 'MAX' position.

Hot and cold mains fed water can be supplied direct to an over-rim flushing bidet subject to local Water Company requirements.

With all mains fed systems the flow of water from the individual taps will vary with the number of outlets operated simultaneously and the cold water mains supply pressure to the property. Flow balancing using 'Ball-o-Fix' type valves is recommended to avoid an excessive reduction in flow to individual outlets. For further information contact Worcester Heat Systems Technical Helpline.

2.10 Safety Considerations

The appliance must not be operated in a waterless condition.

The appliance must not be operated with the boiler inner casing cover removed.

Work must not be carried out on the appliance without the gas and electricity supplies being switched off.

Checks must be made to ensure that, where applicable, the ventilation openings made into walls and partitions are of the correct size and are not obstructed.

IMPORTANT: Where back-flow prevention devices, including water meters, are fitted the expansion of hot water into cold water main can be prevented. This can result in a pressure build-up that may cause damage to the boiler and household devices such as showers, washing machines etc.

In these cases we recommend that a mini-expansion vessel be fitted adjacent to the boiler in the cold water pipe.

2.11 Operation

Domestic Hot Water: With a demand for hot water the burner will light at its maximum setting and then automatically adjust its output to maintain the temperature of the delivered water. When hot water is no longer required, the burner will extinguish. The fan and pump may continue to run for a short period to dissipate the residual heat from the appliance.

Central Heating: With a demand for heating the burner will light at its minimum setting and gradually increase to give the maximum output. The output of the appliance is then automatically adjusted to maintain the temperature of the system. The output can reduce down to a minimum of 11.9 kW. If the system no longer requires even the minimum output to maintain the desired room temperature the burner will extinguish. The fan and pump may continue to run to dissipate the residual heat from the appliance. The appliance will remain off for a fixed period of three minutes before re-lighting to automatically meet the system requirements.

Domestic Hot Water and Central Heating: The appliance will supply heat to the central heating system as required. A demand for domestic hot water at a tap or shower will override the central heating requirement for the period of the domestic hot water demand. When hot water is no longer required the appliance will return to the central heating state and its normal mode of operation.

Fig. 1. Appliance water flow diagram.

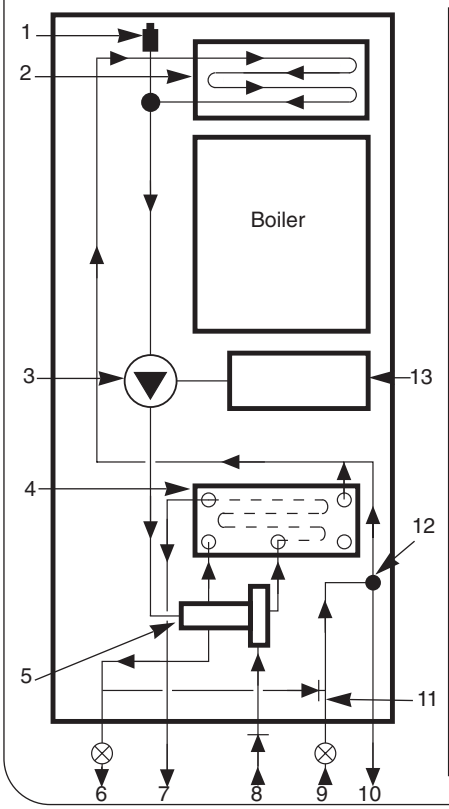

1. Automatic air vent.
2. Gas to water heat exchanger.
3. Circulating pump.
4. Water to water heat exchanger.
5. Water diverting valve.
6. CH flow.
7. DHW out.
8. Mains cold water in.
9. CH return
10. Safety discharge.
11. Central heating by-pass adjustment.
12. Pressure relief valve.
13. Sealed system expansion vessel.

3. Technical Data

Table 1.

	NOMINAL BOILER RATINGS (10 Minutes After Lighting)							
	BOILER ADJUSTED FOR G20 (Natural Gas)							
	OUTPUT		INPUT (Net)		BURNER SETTING PRESSURE		GAS RATE	
	kW	Btu/h	kW	Btu/h	m bar.	in. wg.	m^3/h	ft^3/h
DHW	9.0	30,700	10.4	35,500	1.8	0.8	1.1	37.28
CH	11.9	40,600	13.8	47,100	3.5	1.4	1.46	51.5
MAX	24.0	81,900	27.0	92,400	13.2	5.3	2.9	100.0

Note: Gross Heat Input x 0.901 = Net Heat Input.

Table 2.

FLUE DETAILS			
HORIZONTAL FLUE		**mm**	**inches**
WALL HOLE	WIDTH	365	14.4
	HEIGHT	265	10.5
STANDARD FLUE	MINIMUM LENGTH	225	8.9
	MAXIMUM LENGTH	420	16.5
EXTENDED FLUE	MAXIMUM LENGTH	560	22

Table 3

PUMP HEAD							
BOILER OUTPUT		HEAD		MIN. FLOW RATE		FLOW/ RETURN DIFFERENTIAL	
kW	Btu/h	Metres	Feet	L/min.	Gal/Min.	°C	°F
9.0	30,700	4.8	15.7	11.7	2.57	11°C	20°F
24.0	81,900	2.0	6.6	20.5	4.5	12.5°C	22°F

Table 4

MECHANICAL SPECIFICATIONS	
CENTRAL HEATING FLOW - COMPRESSION	22mm
CENTRAL HEATING RETURN - COMPRESSION	22mm
COLD WATER INLET - COMPRESSION	15mm
DOMESTIC HOT WATER FLOW - COMPRESSION	15mm
GAS INLET	Rp ¾
RELIEF VALVE DISCHARGE - COMPRESSION	15mm
CASING HEIGHT	850mm
CASING WIDTH	450mm
CASING DEPTH	360mm
WEIGHT - DRY	45kg
WEIGHT - MAXIMUM INSTALLATION	42kg
WEIGHT - PACKAGED	48kg

Table 5

PERFORMANCE SPECIFICATIONS			
PRIMARY WATER CAPACITY		2.0 litres	
MAXIMUM MAINS INLET PRESSURE		10 bar	
MINIMUM MAINS INLET PRESSURE (working) for max. hot water flow		1.2 bar	
MINIMUM MAINS INLET PRESSURE (working) to operate appliance		0.7 bar	
MAXIMUM CENTRAL HEATING FLOW TEMPERATURE		82°C nom	
MAXIMUM CENTRAL HEATING SYSTEM SET PRESSURE		1.5 bar	
DOMESTIC HOT WATER TEMPERATURE RANGE		50 - 62°C	
OUTPUT TO DOMESTIC HOT WATER	NATURAL GAS (G20)	9.0 - 24 kw	
OUTPUT TO CENTRAL HEATING	NATURAL GAS (G20)	11.9 - 24 kw	
DOMESTIC HOT WATER SPECIFIC RATE AT 30° RISE		12.4 l/min	
MAXIMUM DOMESTIC HOT WATER FLOW RATE FROM APPLIANCE AT 40° RISE		9.0 l/min	
NOx CLASSIFICATION		Class 3	
SEDBUK*		79.4%	BAND D

*The value is used in the UK Government Standard Assesment Proceedure (SAP) for the energy rating of dwellings. The test data from which it has been calculated have been certified by the Gastec notified body.

Table 6

DOMESTIC HOT WATER - TEMPERATURE RISE				
DISCHARGE RATE l/min	7	8	9	10
TEMPERATURE RISE °C	49	42.9	38.1	34.3

Table 7

GAS SUPPLY SYSTEM - BASED ON NG (G20)			
TOTAL LENGTH OF GAS SUPPLY PIPE meters			
3	6	9	
GAS DISCHARGE RATE m3/h			PIPE DIAMETER mm
2.9	-	-	15
8.7	5.8	4.6	22
18.0	12.0	9.4	28

Table 8

CLEARANCES (mm)		
	INSTALLATION	SERVICE
ABOVE APPLIANCE	100	100
IN FRONT OF APPLIANCE	600	600
BENEATH APPLIANCE	200	200
RIGHT AND LEFT HAND SIDE	10	10

Table 9

SYSTEM CAPACITY WITH A 10 LITRE VESSEL			
TOTAL SYSTEM VOLUME litres			
INITIAL PRESSURE bar	INITIAL CHARGE PRESSURE bar		
	0.5	1.0	1.5
1.0	72	92	n/a
1.5	39	53	64

4. Siting The Appliance

4.1 Particular attention is drawn to the requirements of the current I.E.E. Wiring Regulations and, in Scotland, the electrical provisions of the Building Regulations applicable in Scotland.

4.2 The appliance is not suitable for external installation.

4.3 The appliance does not require any special wall protection.

4.4 The wall must be capable of supporting the weight of the appliance. See Table 4.

4.5 The following clearances must be available for installation and for servicing. See Fig. 2.

4.6 The appliance can be installed in a cupboard used for airing clothes provided that the requirements of BS 6798 and BS 5440:2 are strictly followed.

4.7 No combustible surface must be within 75mm of the casing. See BS476:4.

4.8 An airing space must be separated from the boiler space by a perforated non-combustible partition. Expanded metal or rigid wire mesh are acceptable provided that the major dimension is less than 13mm. See BS 6798:1987.

4.9 The distance between the inner face of a cupboard door and the cabinet front should not be less than 75mm.

4.10 The pipe connection positions on the manifold are shown in Fig 3 allowing the system to be pre-piped and flushed before the appliance is fitted. Always consider the possible need to disconnect the pipes from the appliance after installation.

Fig. 2. Appliance casing dimensions and required clearances.

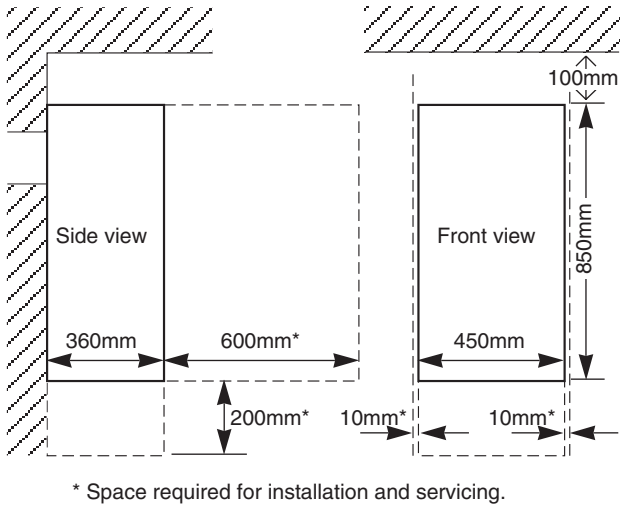

Fig. 3. Appliance pipework connections

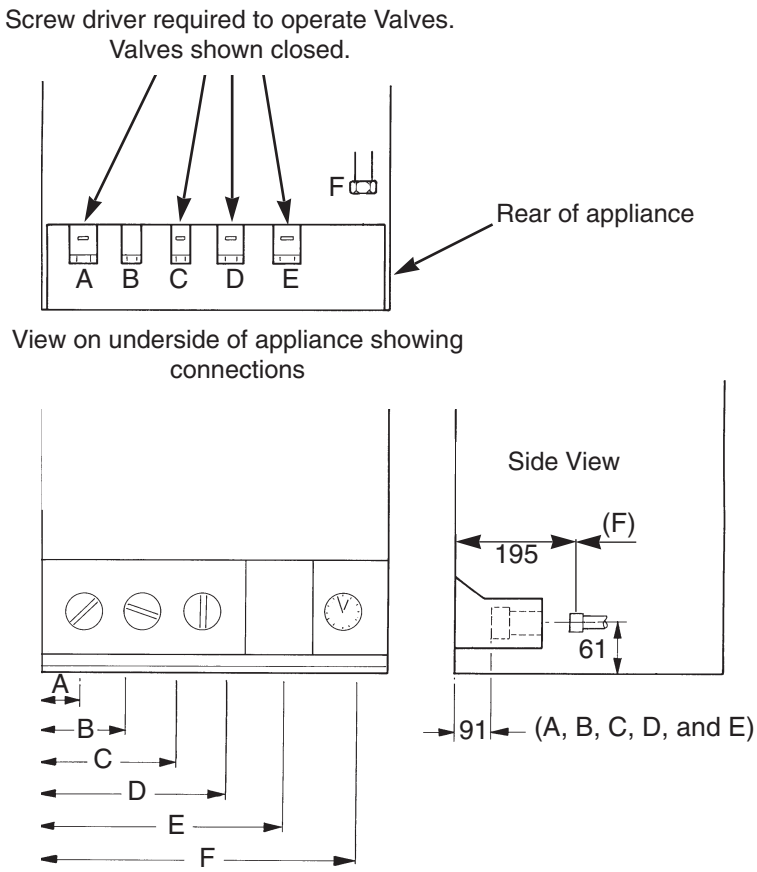

A	CH Flow	=	62.5
B	DHW Out	=	127.5
C	Mains Cold Water In	=	192.5
D	Gas Inlet	=	257.5
E	CH Return	=	322.5
F	Safety Relief	=	382.5

5. Siting The Flue Terminal

See Fig. 4

5.1 The flue must be installed as specified in BS 5440:Part 1and the building regulations.
NOTE: Installations coming under the jurisdiction of Building Control should adhere to the increased clearances.

5.2 The terminal must not cause an obstruction nor the discharge cause a nuisance.

5.3 If the terminal is fitted within 1000mm of a plastic or painted gutter or within 500mm of painted eaves then an aluminium shield at least 1000mm long should be fitted to the underside of the gutter or painted surface.

5.4 If a terminal is fitted less than 2 metres above a surface to which people have access then a guard must be fitted. See Section 2.9.

5.5 The terminal guard must be evenly spaced about the flue terminal and fixed to the wall using plated screws.

5.6 In certain weather conditions a terminal may steam and siting where this could cause a nuisance should be avoided.

5.7 Take care to ensure that combustion products do not enter ventilated roof voids.

6. Air Supply

6.1 Installations in cupboards or compartments require permanent vents for cooling purposes, one at high level and one at low level, either direct to outside air or to a room. Both vents must pass to the same room or be on the same wall to outside air.
6.2 Refer to BS 6798 and BS 5440:2 for additional information.
6.3 There must be sufficient clearance around the appliance to allow proper circulation of ventilation air. The clearances required for Installation and Servicing will normally be adequate for ventilation.
6.4 The minimum free areas required are given below.

POSITION OF AIR VENTS	AIR FROM THE ROOM	AIR DIRECT FROM OUTSIDE
HIGH LEVEL	270 cm^2	135 cm^2
LOW LEVEL	270 cm^2	135 cm^2

6.5 Refer to BS 6798 and BS 5440:2 for additional information.

Fig. 4. Siting of the flue terminal.

TERMINAL POSITION	MIN. DISTANCE
A– Directly below an opening, air brick, window etc.	1500mm
A1– Above an opening, air brick, window etc.	300mm
A2– Horizontaly to an opening, air brick, window etc.	600mm
B– Below gutters, soil pipes or drain pipes.	300 mm
C– Below eaves.	300 mm
D– Below balconies or car port roof.	600 mm
E– From vertical drain pipes and soil pipes.	75 mm
F– From internal or external corners.	600 mm

TERMINAL POSITION	MIN. DISTANCE
G– Above ground, roof or balcony level.	300 mm
H– From a surface facing a terminal.	600 mm
I– From a terminal facing a terminal	600 mm
J– From an opening in a car port (e.g. door window) into dwelling.	1200 mm
K– Vertically from a terminal on the same wall.	1500 mm
L– Horizontally from a terminal on the same wall.	300 mm

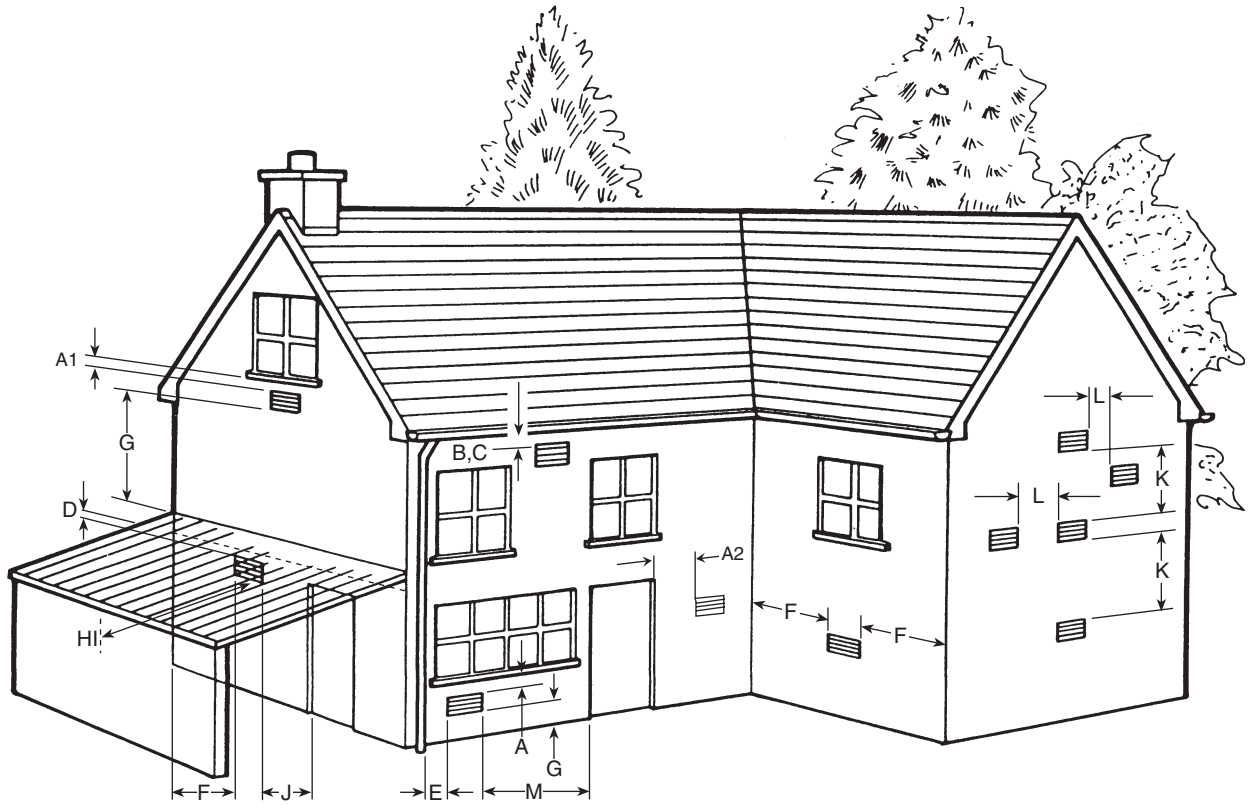

7. Sealed Primary Systems

See Figs. 5, 6 and 6a

7.1 The system must comply with the requirements of BS 6798 and BS 5449.

7.2 The appliance must not be operated without the system being full of water, properly vented and pressurised.

7.3 The pressure relief valve operates at 3 bar (45lb/in^2). The discharge must be directed away from electrical components or where it might be a hazard to the user.

7.4 The pressure gauge indicates the system pressure which must be maintained.

7.5 The 10 litre expansion vessel is charged to 0.5 bar and is suitable for a static head of 5 metres (17.5ft). The pressure can be increased if the static head is greater than 5 metres (17.5ft).

7.6 With an initial system pressure of 0.5 bar, a system capacity of about 72 litres can be accommodated. Refer to BS 7074 for more information. The charge pressure can be increased but with a decrease in system volume.

7.7 The appliance includes a system filling link.

7.8 Water loss must be replaced.

7.9 Repeated venting loses water from the system. It is essential that this water is replaced and the system pressure maintained. Refer to Section 13 Commissioning.

7.10 Connections to the mains water supply must not be made without the authority of the local Water Company.

7.11 The pump is set at maximum and must not be adjusted.

7.12 Connections in the system must resist a pressure of upto 3bar.

7.13 Radiator valves must conform to BS2767:10.

7.14 Other valves used should conform to the requirements of BS1010.

7.15 No special system inhibitor is needed.

8. Gas Supply

8.1 The appliance requires 2.9 m^3/h of natural gas (G20) .

Check that the supply system can accommodate this together with any other appliances connected to it. Refer to Table 7.

8.2 A natural gas appliance must be connected to a governed meter.

8.3 There must be a pressure of 20mbar (G20) at the inlet to the appliance. This is equivalent to a pressure of

18.5 - 19.0mbar (G20) at the inlet pressure tapping on the gas valve.

Fig.5. Sealed primary water system.

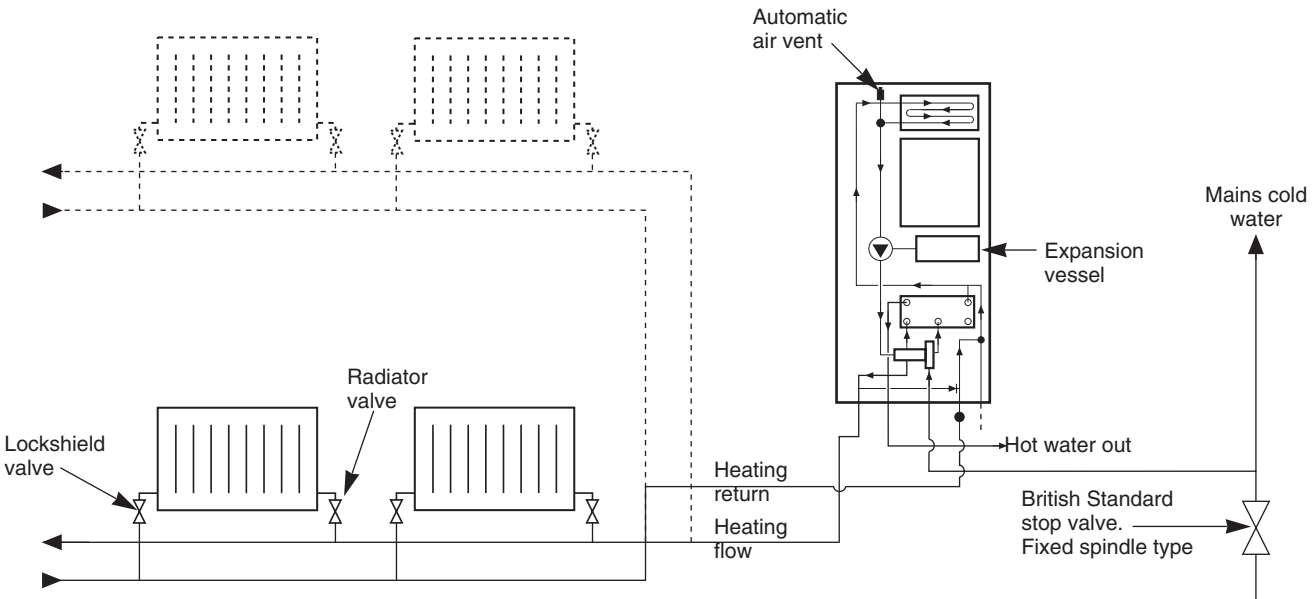

NOTE: A drain cock should be installed at the lowest point of the heating circuit and beneath the appliance.

Fig. 6. Filling Loop.

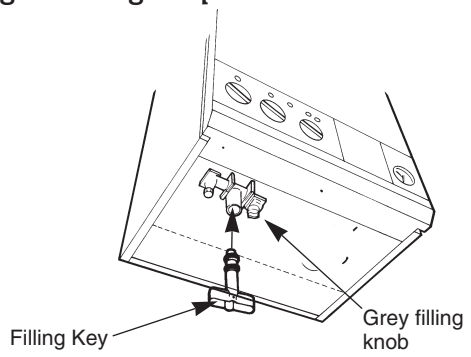

Fig. 6a. Filling Key inserted for filling.

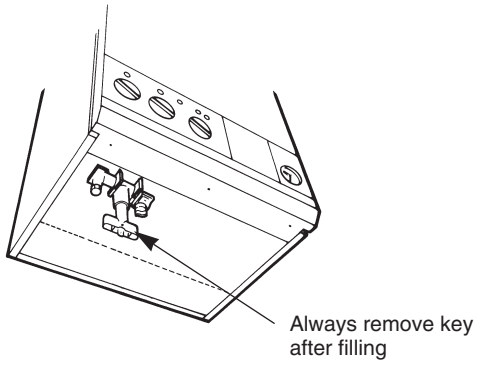

9. Open Vent Primary Systems

9.1 The size of the flow and return pipework is given in Section 3 – Table 4. The components required to connect the appliance to an open vent system are available as an optional extra kit.

9.2 The feed and expansion cistern should be arranged so that there is a minimum static head of 0.3 metres (12 inches) above the top of the appliance or above the highest point in the heating circuit, whichever is the higher. See Fig. 7

9.3 The feed and vent pipe should be 22mm diameter and rise continuously from the appliance to the feed and expansion cistern.

9.4 A pressure relief valve is not required on an open vented system.

9.5 Air within the appliance will be expelled via the feed and vent connection or dissipated into the rest of the system which must be fitted with manual air vents at any high point.

9.6 The pump is set to maximum and must not be reset.

9.7 If it is required to use the appliance for domestic hot water before the central heating circuit is connected, a 22mm copper by-pass must be connected between the central heating flow and return. Refer to Section 12.

Fig. 7. Open vent water system.

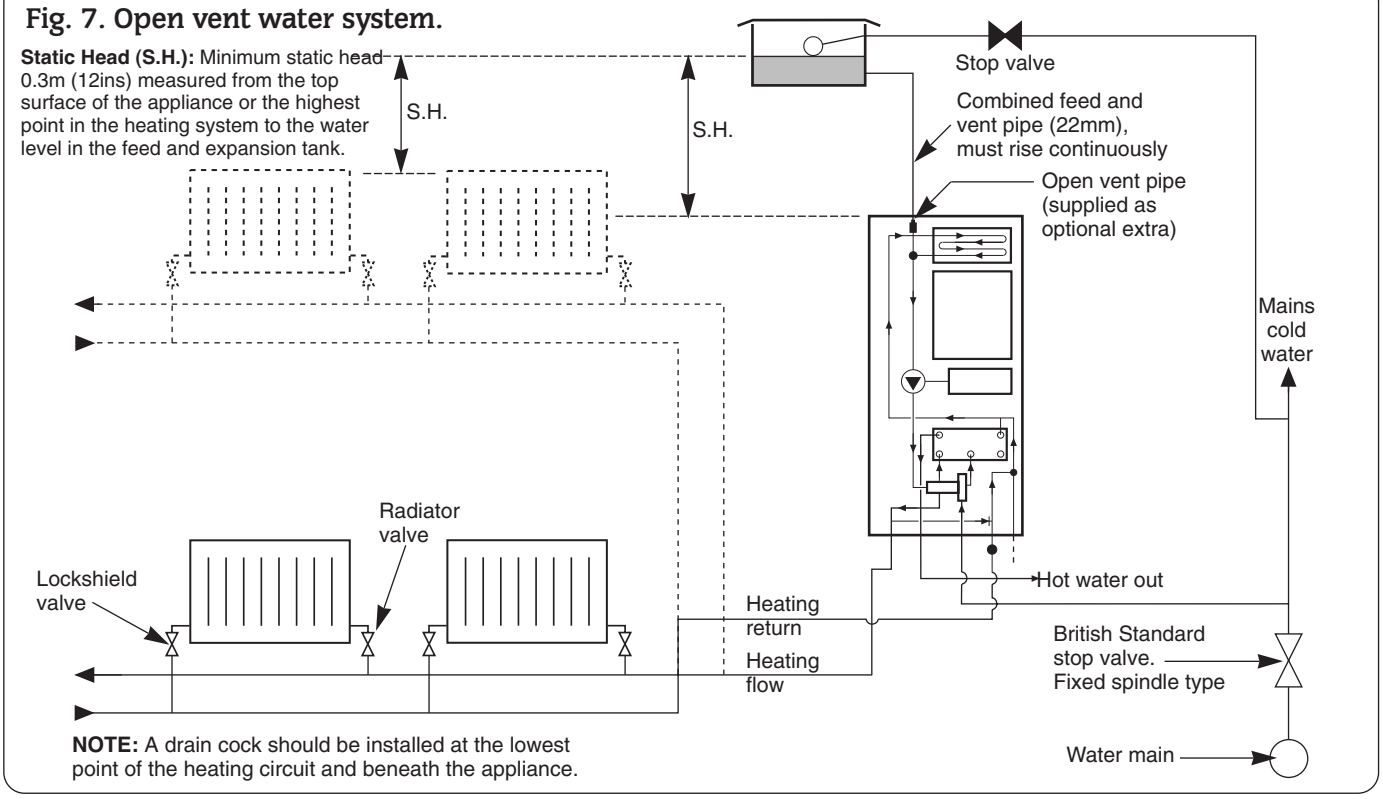

10. Domestic Hot Water

10.1 The following are general requirements and, if necessary, reference should be made to the local Water Company before fitting the appliance.

10.2 MAINS COLD WATER INLET. Devices capable of preventing the flow of expansion water must not be fitted unless separate arrangements have been made. An expansion vessel connection point is provided within the appliance. An Rc1/2 connection is provided. A mini expansion vessel kit is available from Worcester Heat Systems Ltd. A thread sealant compatible with potable water must be used.

10.3 The final 600mm of the mains cold water connection to the appliance should be made in copper tube only.

10.4 The appliance is suitable for a mains pressure of up to 10 bar (150 lb/in^2).

10.5 The appliance is fitted with a mains supply isolating valve.

10.6 The maximum domestic hot water flow rate is 9.0 litres/min (±15%) (2.0 gallons/min).

10.7 In winter (when the mains inlet water temperature is lower) a reduced flow rate at the taps may be required to achieve the hot water delivery temperature available in warmer weather.

10.8 It is suggested that long pipe runs to the taps or shower should be insulated to prevent the rapid cooling of domestic hot water after a tap or shower has been turned off.

10.9 Hot and cold taps and mixing valves used with this appliance must be suitable for operating at mains pressure and temperatures of 65°C.

10.10 No anti-syphonage arrangements are necessary except for some loose head showers.

10.11 Thermostatically controlled or pressure equalising shower valves will guard against the flow of water at too high a temperature.

10.12 The head of a loose head shower must not fall closer than 25mm above the top edge of the bath to prevent its immersion in bath water. Alternatively the shower must be fitted with an anti-syphonage device at the point of the flexible hose connections.

10.13 The supply of hot and cold mains water direct to a bidet is permitted, subject to local Water Company requirements, provided that the bidet is of the over-rim flushing type. The outlet(s) should be shrouded and unable to have any temporary hand held spray attached. No anti-syphonage arrangements are necessary.

10.14 As the maximum temperature of the Water to Water heat exchanger is limited by the control circuit, there is normally no need for water treatment to prevent scale accumulation. In exceptional circumstances a device to prevent scale formation can be fitted.

Installation of a scale inhibitor assembly should be in accordance with the requirements of the local Water Company. An isolating valve should be fitted to allow servicing. The water hardness can be determined using a standard test paper or by reference to the local Water Company.

11. Electrical

11.1. Mains supply : 230V ~ 50Hz, 140 watts. External fuse 3A, Internal fuses F1 - 2A, F2 - 1.25A (20mm). Spare internal fuses are supplied with the appliance. Refer to Fig 14.

11.2. The appliance must be earthed. It must be possible to completely isolate the appliance.

11.3. The mains cable must be 0.75mm2 (24x0.20 mm) to BS6500-Table 15 or 16.

11.4 The mains cable must be connected to the terminal ST12 marked L (red or brown lead), N (black or blue lead) and the Earth stud (green or green/yellow lead) and secured with the cable clamp. Check that sufficient loose lead has been left to allow access to the control box. The Earth lead must be still be slack when the other leads are taut. Refer to Fig 8.

11.5. The connection to the mains must be either: A 3A fused three-pin plug and unswitched socket outlet, both complying with BS1363 or a double pole isolator with a contact separation of 3mm in all poles and supplying the appliance and controls only.

11.6. Access to the mains connection on the driver board is gained by removing the bottom cover from the facia. Refer to Fig 12.

11.7. A room thermostat or an externally mounted programmer must be suitable for mains voltage operation and the leads securely fixed in the clamps provided. The controls must be earthed at the connection on the control board. Refer to Fig 13.

11.8. A programmer, to fit into the facia, is available to control the CH. Full instructions are sent with the programmer.

Refer to Fig 15.

11.9. A clock, to fit into the facia, is available to control the operation of the central heating.

11.10. On very rare occasions an external frost thermostat might be considered where parts of the system are remote from the appliance. Refer to Worcester Heat Systems Technical Department for more information - Tel: 0990 266241.

11.11. A radio frequency room thermostat is available for use with the appliance.

11.12. **Safety Check**: If there is an electrical fault after installation check for fuse failure, short circuits, incorrect polarity of connections, earth continuity or resistance to earth.

Fig. 8. Mains electricity connections.

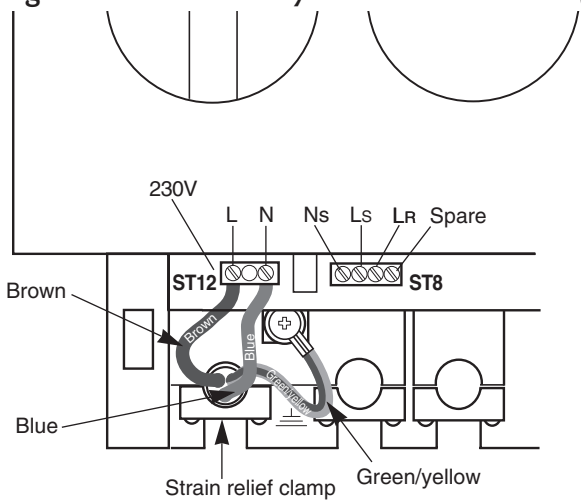

Fig. 9. Wiring diagram.

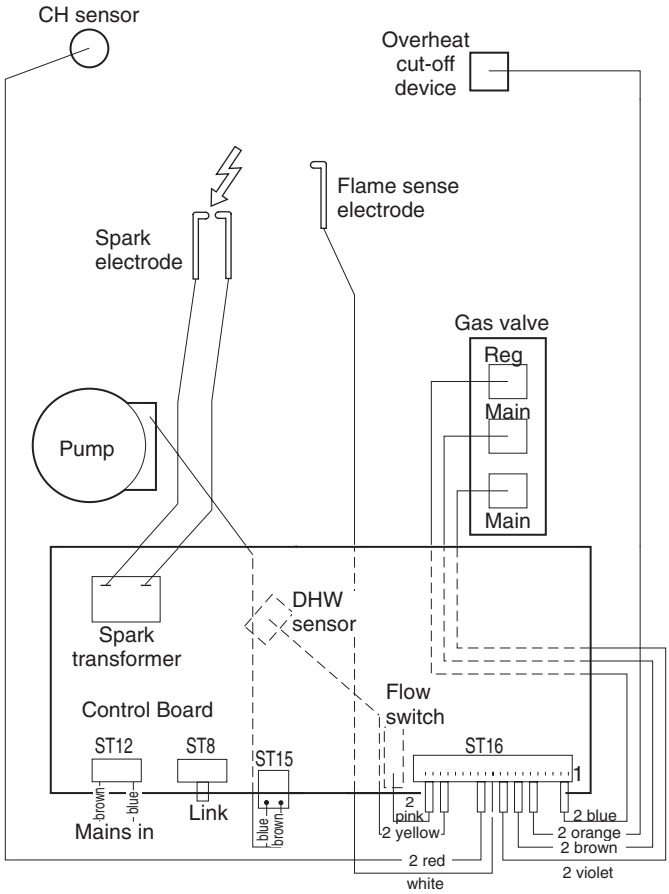

Fig. 10. Functional flow diagram.

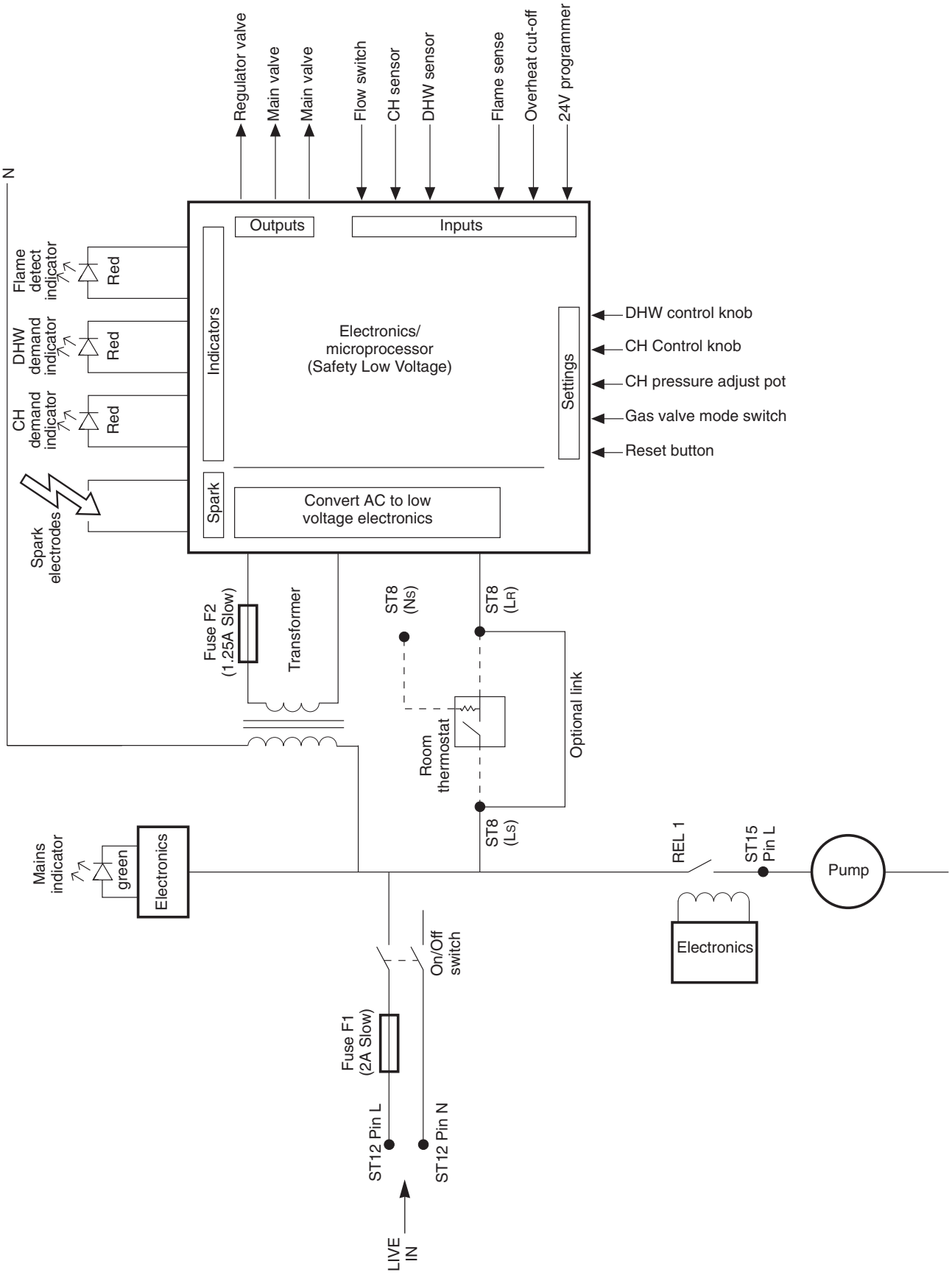

Fig 11 - Electrical Connections

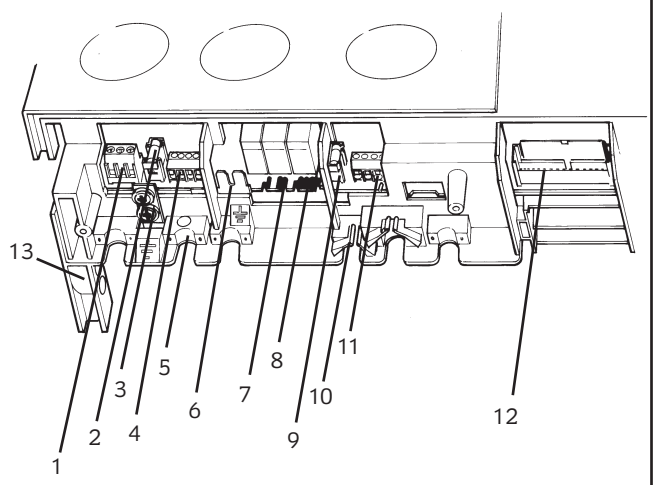

1. ST12-Mains
2. Fuse-F1
3. Earth Screw
4. ST8-Room Thermostat and External Control -Mains Voltage
5. Cable Entry Screw Clamp
6. Earth Tag
7. ST15-Pump
8. ST1-Fan
9. Fuse-F2
10. Cable Entry Clamp
11. ST13-24volt Controls
12. Main Harness and Clamp
13. Control Panel Pivot Point

Fig 12 - Facia Connections Cover

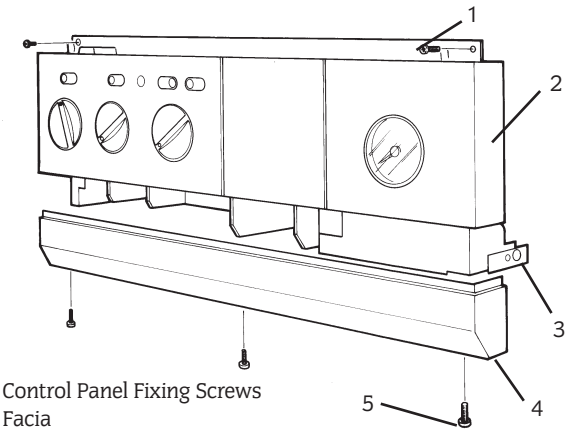

1. Control Panel Fixing Screws
2. Facia
3. Control Panel Pivot Point
4. Connection Cover
5. Connection Cover Fixing Screws

Fig 13 - Mains Voltage External Controls Connections

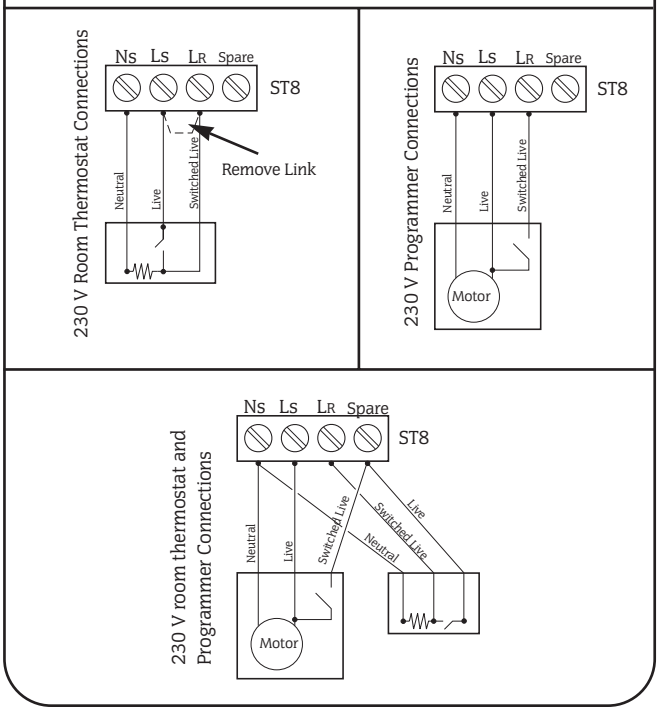

Fig 14 - Replacement Fuses

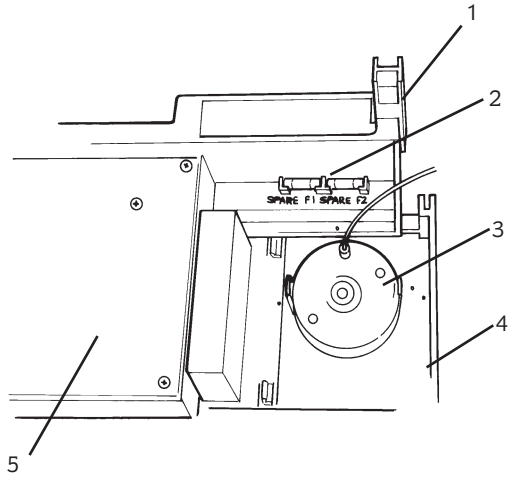

1. Control Panel Pivot Point
2. Fuses-F1,F2
3. Pressure Gauge
4. Facia Panel
5. Control Board Assembly

Fig 15 - Programmer Connection

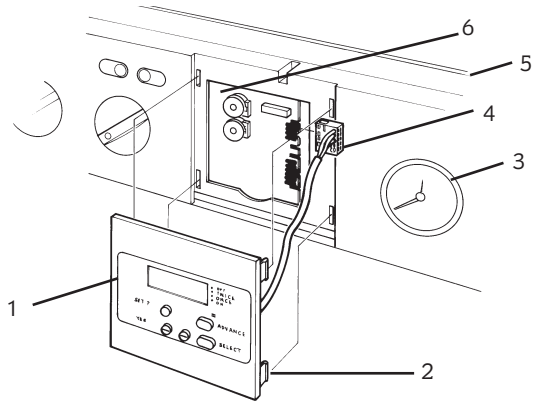

1. Programmer
2. Programmer Fixing Clip
3. Pressure Gauge
4. Programmer Connector
5. Facia
6. Control Board

12. Installation

NOTE: READ THIS SECTION FULLY BEFORE COMMENCING INSTALLATION

12.1 The appliance is supplied suitable for fitting to a sealed system. If it is to be fitted to an open vent system refer to section 8.

12.2 FLUE OPTIONS.

The standard flue length is from 225mm to 420mm measured from the appliance casing to the outer wall.

An extension flue kit is available to increase the length to 560mm.

The flue must be installed as specified in BS 5440 Part 1.

12.3 GENERAL FITTING.

Check that the appliance carton contains: Appliance, installer's instruction pack, pre-plumbing manifold, wall plate, user's information pack and installer's hardware pack.

Assemble the wall plate to the pre-plumbing manifold as shown in Fig. 16 using the two M4 thread forming screws supplied in the hardware pack.

Check that the position chosen for the appliance is in accordance with the instructions given in Sections 4 and 5.

Hold the wall mounting plate to the wall. Check the manifold is horizontal.

Leave the pre-fitted plastic manifold cover in place to protect the valves and 'O' rings from dust and dirt during installation.

Mark the position of the fixing holes and the position of the flue hole onto the wall.

Drill the eight retaining holes 70mm (2.75in.) deep. Fit the wall plugs supplied with the appliance.

Cut the 365mm (14.4in.) x 265mm (10.5in.) hole through the wall for the balanced flue air duct. Make good any plaster or brickwork.

Screw the wall mounting plate into position using the screws supplied with the appliance. See Fig. 16.

Connect the gas, water and pressure relief valve connections to the manifold. The primary system should be flushed and treated in accordance with the recommendations of BS 7593:1992.

Remove the cabinet front cover by lifting and pulling forward.

Remove the inner casing by unscrewing the four retaining screws.

Remove the flue hood by releasing the clip at the front and pulling forwards.

12.3 AIR AND FLUE DUCT PREPARATION AND ASSEMBLY

From the carton containing the flue kit, remove the flue terminal, flue duct and the package containing: 4 No. 8 wall plugs, 1 roll ducting tape, 4 No. 8 wood screws, 1 tube of silicone sealant.

Separate the air and flue ducts from the terminal.

Measure the distance from the inside edge of the mounting plate to the outside of the wall **W**. See Fig. 19.

Fit the air ducts together and adjust the total length until it corresponds with the **W** dimension. Using the ducting tape provided firmly tape the joint. See Fig. 18.

From the inside, push the assembled air ducts through the aperture with the flanged end of the duct on the inside.

Apply the silicone sealant in a bead approximately 10mm diameter around the balanced flue locating spigot on the back face of the appliance. See Fig. 20.

Remove the plastic cover from the manifold and make sure that the 'O' rings are fitted clean and lubricated.

Lift the appliance onto the mounting plate and locate the two M6 studs on the mounting plate into the two holes in the back of the case. Locate the balanced flue spigot into the balanced flue air ducts. Fasten the appliance with the two M6 nuts and also use the caps (from Installer Hardware Pack) to secure the appliance to the pre-plumbing manifold at the bottom. (See Fig. 16). Access to these pegs and caps can be made easier by removing the bottom panel. Refer to Section 15.3, d.

Fig. 16. Fixing the wall mounting plate.

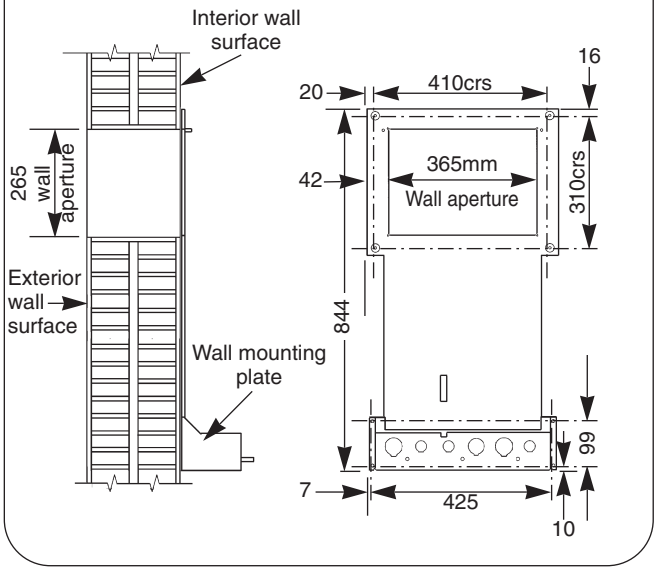

Fig. 17. Fixing the appliance to the wall mounting plate.

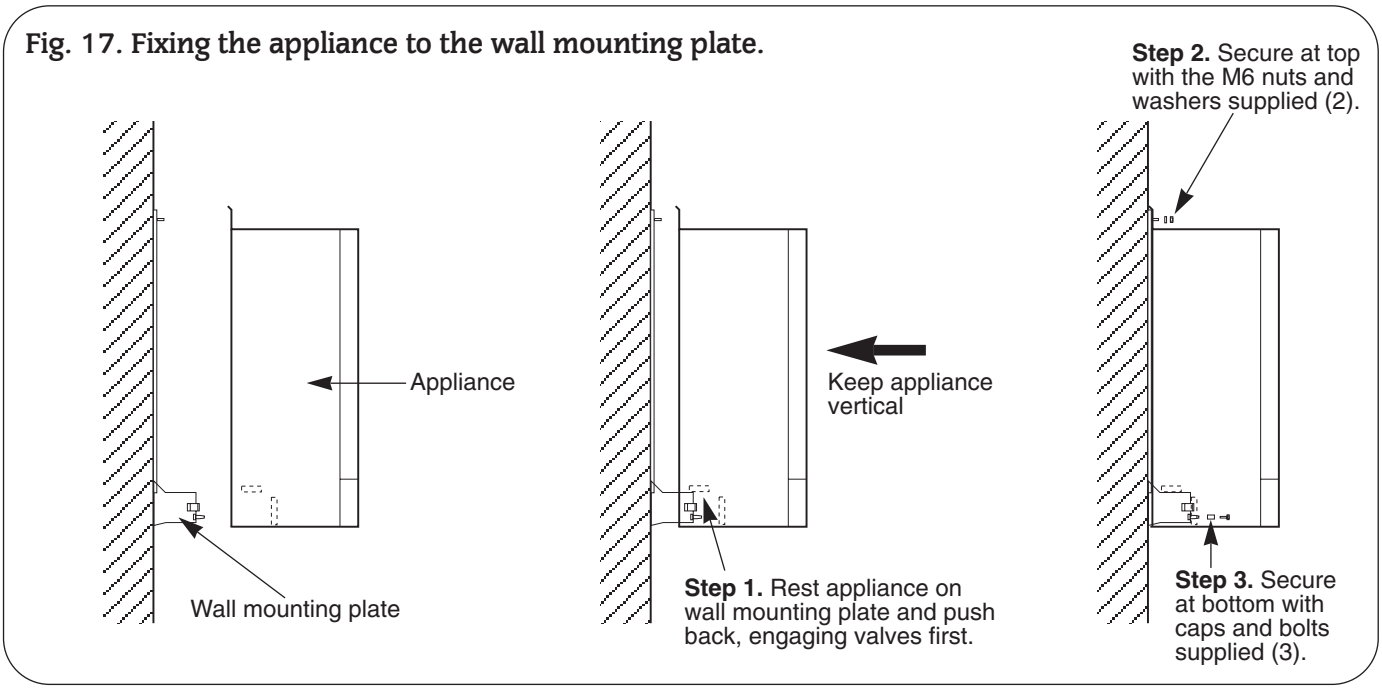

From the outside, make good the gap between the air duct and the brickwork. Fit the flue terminal to the air duct and mark the position of the four fixing holes. Drill four holes 5mm (0.19in.) diameter x 30mm (1.25in.) deep in the wall and fit the wall plugs provided.

Fix the flue terminal to the wall using the four No. 8 wood screws.

NOTE: The flue terminal is not symmetrical and the narrow air inlet gap is at the top. The top flange is marked TOP.

From inside the appliance enter the exhaust duct, plain end first. Engage the exhaust duct over the front half of the exhaust duct attached to the flue terminal. Slide in the exhaust duct and secure the flange with the screws but do not tighten.

Engage the spigot on the flue hood into the exhaust duct and slide into position on the heat exchanger. Fix into position with the clip at the front.

Tighten the two screws securing the exhaust duct.

12.5 FINAL INSTALLATION

Check that all the water and gas connections have been tightened. Unscrew the automatic air vent cap. Refer to Fig. 28.

If a facia mounted programmer is to be fitted follow instructions with the programmer..

Hinge down the facia as described in Section 15.3, c.

Connect the mains electrical supply to the appliance at terminal ST 12 See Fig. 8. Connect any room and/or frost thermostats. The electrical leads must pass through the appropriate space in the control panel and be fixed with the cable clamps provided. See Figs. 11 and 12. Refit the facia panel.

Test the gas supply pipework up to the appliance for soundness as indicated in BS 6891.

Refer to Section 13.2 for a full description of the filling, venting and the pressurising of the system.

If the appliance is not to be commissioned immediately, replace the cabinet front panel. Check that the gas supply, the electrical supply and the water connections are all turned off.

If the premises are to be left unoccupied during frosty conditions, then drain the appliance and system. For short inoperative periods, leave the appliance under the control of the built in frost thermostat or the remote frost thermostat (if fitted) or leave operating continuously with the room thermostat set at 6°C.

Fig. 18. Air duct adjustment.

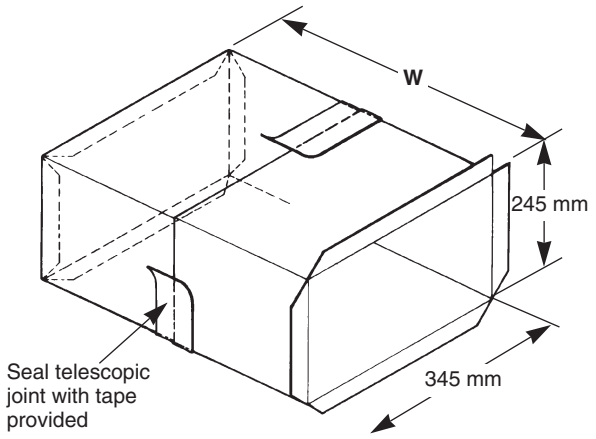

Fig. 20. Silicone bead.

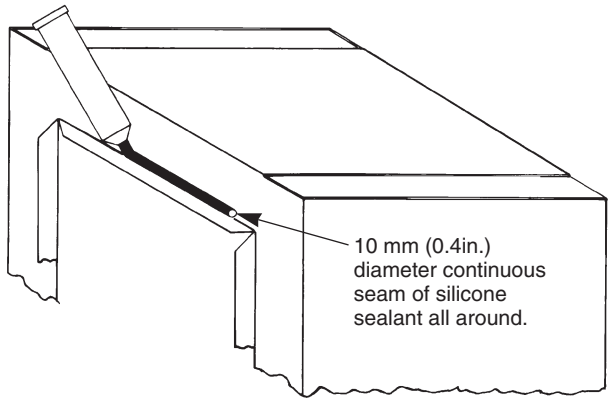

Fig. 19. Arrangement of balanced flue and terminal.

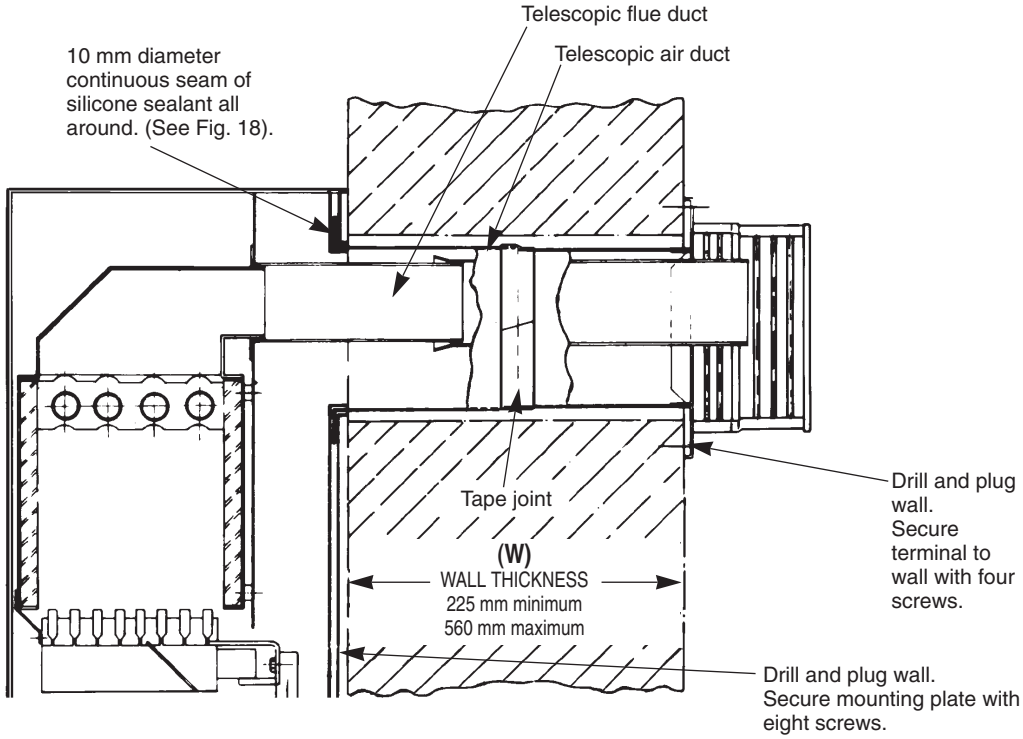

Fig. 31. Circulating pump

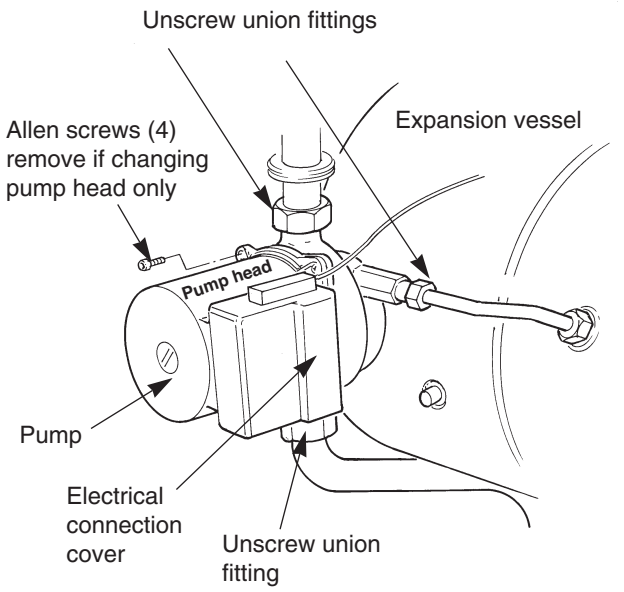

Fig. 32. Expansion Vessel

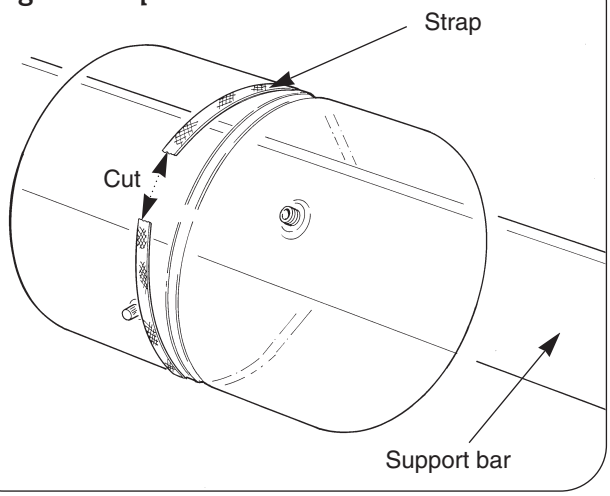

16. Water Diverting Valve. Refer to Figs. 30,33.
Check that the electricity supply to the appliance is turned off.
Drain the central heating and domestic hot water circuits as described in Sections 16.3, a and b.
Hinge down the facia panel into the Servicing Position as described in Section 15.3, c.
Remove the bottom panel, filling loop, water to water heat exchanger and micro switch assembly as described in Section 15.3, d, and Sections 16.3, 15,18 and 21.
Pull off the large wire clip locating the water diverting valve to the central heating plastic flow manifold on the left hand side of the appliance.
Remove the wire clip securing the copper by-pass pipe to the flow manifold.
Retain the wire clips.
Carefully ease the by-pass pipe out of the manifold and allow the pipe to swing forwards to clear the manifold connection.
Remove the screw securing the bracket, located at the right hand end of the water diverting valve, to the appliance casing.
Remove the four screws located at the left hand side securing plastic manifold to the appliance.
Remove the water diverting valve and plastic manifold assembly clear of the appliance.
Ease the water diverting valve out of the plastic manifold.
Remove the securing bracket from the valve and the water filter from the valve cold water inlet.
Retain the plastic manifold, fixing screws, support bracket and water filter.
Discard the water diverting valve.
Reassemble the original support bracket, water filter and new 'O' ring seals to the replacement valve.
Lubricate the 'O' ring seal and push the plastic flow manifold onto the valve.
Reassemble the water diverting valve and plastic manifold assembly to the appliance in the reverse order.
Ensure all 'O' ring seals and fibre washers are renewed and replaced correctly and the 'O' rings are lubricated.
Reassemble the appliance in the reverse order.
Open the valves and fill and re-pressurise the system as described in Section 13.2.

Fig.33. Water Diverting Valve and Micro Switch Assembly.

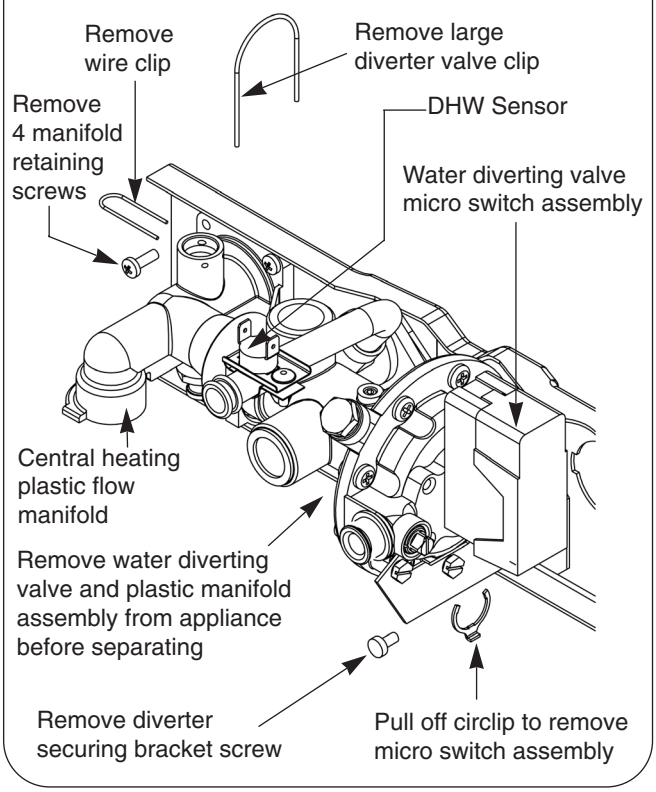

Set the gas valve mode switch to the minimum position.

The burner pressure will drop to the minimum setting which should be 2mbar for natural gas.

Test for gas soundness at the joint between the burner and the gas valve with leak detection fluid.

NOTE: The burner pressure is factory set and if (after checking that the supply pressure is sufficient) the correct pressure is not obtained then Worcester Heat Systems Service Department should be contacted.

If the appliance does not light, check that it is not in the 'lockout' state by pressing the lockout reset button. See Fig. 25.

Set the gas valve mode switch back to the normal position and refit the facia.

Turn off the electricity supply, and then back on again to reset the controls.

Gradually close the hot tap and check that the burner pressure drops. Fully open the tap and check that the burner pressure rises. Fully close the tap and check that the burner goes off. The fan may continue running until the appliance has cooled to a preset temperature.

Set the Operating Switch to OFF.

Central Heating

Check that all the radiator valves are open. Set the room thermostat and the Central Heating Temperature Control to maximum. Set the DHW temperature control to MIN.

On sealed systems check that the system is pressurised and set to the required pressure as indicated on the gauge.

Set the Programmer, if fitted, to HEATING & WATER.

Set the operating switch to ON.

The burner will light.

The appliance will modulate its output from 11.9 to 24.0 kW over a period of about two minutes.

Check the system to ensure that all the radiators are heating up evenly. If not then bleed each radiator through its vent screw.

Shut down all but one of the radiators and observe the burner pressure fall. Open all of the radiator valves and check that the burner pressure rises.

Balance the system so that the required temperature difference across the central heating flow and return pipes is obtained. See Table 3.

Fig. 22. Pressure relief valve.

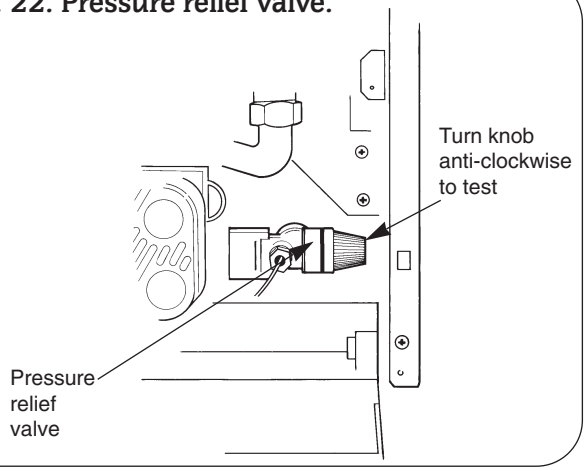

Fig. 24. Central heating by-pass adjustment.

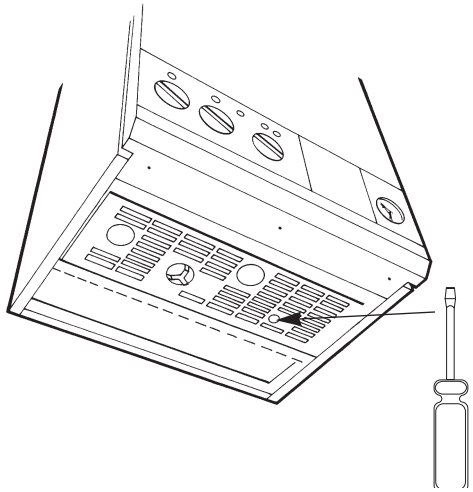

Fig. 23. Gas Valve

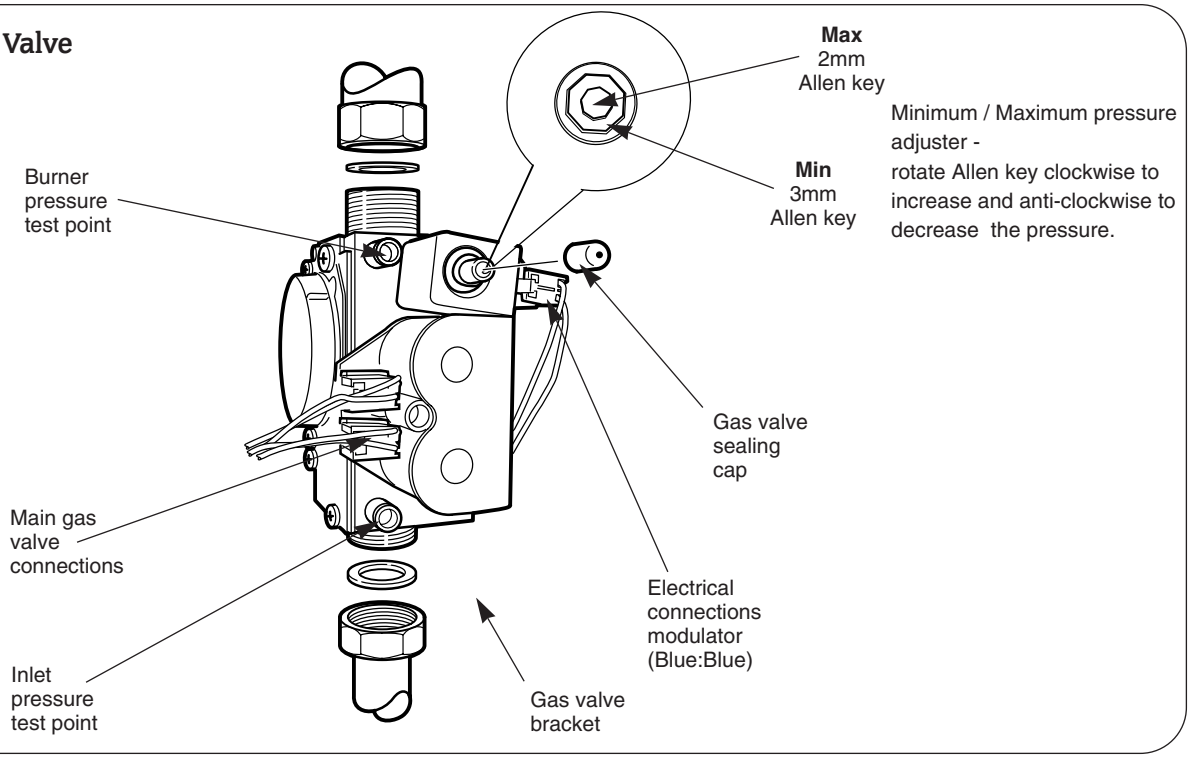

Adjust the central heating by-pass valve until the same temperature difference is obtained. See Fig. 24. This should be carried out with only a single radiator operating. If thermostatic radiator valves are fitted then one radiator should be left uncontrolled. The bypass valve should never be fully closed.

Set the room thermostat to minimum and check that the burner goes out. Reset the room thermostat to maximum and the burner will re-light and follow the normal operating procedure.

Check for proper ignition of the burner after a break in the gas supply. Turn off the gas service cock and wait for 60 seconds. The burner will go out but sparking from the electrode will continue for 10 seconds when the appliance will enter a 'lockout' state. Carefully open the gas service cock, press the lockout reset button and observe the burner re-light and follow the normal sequence of operation. Refer to Fig.25.

Set the Operating Switch to OFF.

Turn off the gas service cock and the electrical supply to the appliance.

Drain the system while the appliance is still hot.

Refill, vent and, with a sealed system, re-pressurise as described in Section 13.2.

Domestic Hot Water and Central Heating

Turn on the electricity supply to the appliance and open the gas supply cock at the appliance.

Set the Operating Switch to ON. If a programmer is fitted, set the domestic hot water to Continuous or 24Hrs and the central heating to ON. The burner will light and heat will pass into the system. Set the DHW temperature to MAX and turn on a hot water tap and check that fully heated hot water is discharged from the tap.

Close the tap and the burner will go off. The appliance will then return to the central heating mode and automatically balance with the system requirements.

Set the Operating Switch to OFF and the burner will go out.

13.5 COMPLETION OF COMMISSIONING

Disconnect the pressure gauge from the gas valve and tighten the test point screw.

Restart the appliance and check for gas soundness around the test point screw.

Refit the cabinet front panel.

If the appliance is being passed over to the user immediately, refer to Section 14 - Instructions to the User.

If the appliance is to be left inoperative, check that the Operating Switch is set to OFF. Turn off the gas service cock.

For short inoperative periods, leave the appliance under the control of the built in frost thermostat or the remote frost thermostat (if fitted) or leave operating continuously with the

room thermostat set at 6°C

Do not switch off the electricity supply.

If there is any possibility of the appliance and the system being left totally unused in freezing conditions then switch off the gas and electricity and drain the appliance and the system.

14. Instructions To The User

Fig. 25. User controls.

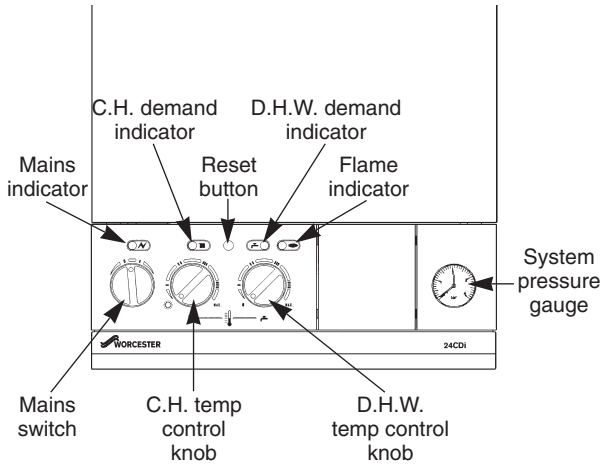

14.1 Tell the user how to operate the appliance and hand over the Users Instructions leaflet.

14.2 Tell the user what to do if the heating system is not to be used in frosty or freezing weather.

14.3 Tell the user the sealed system set pressure.

14.4 Tell the user of the importance of regular servicing. Worcester Heat Systems Ltd. offer a comprehensive maintenance contract.

14.5 Set the system controls to the user's requirements.

14.6 If an external programmer has been fitted which has a programmable domestic hot water facility then it is suggested that this be set to Continuous or the equivalent

14.7 Tell the user about the safety devices and hazard notices.

15. Inspection And Servicing

15.1 SERVICING

To ensure continued efficient operation of the appliance it must be checked and serviced as necessary at regular intervals. The frequency of servicing will depend upon the particular installation conditions and usage, but once per year should generally be adequate. The extent of the service required by the appliance is determined by the operating condition of the appliance when tested by fully qualified engineers.

Any service work must be carried out by competent engineers such as British Gas or Corgi registered personnel.

15. 2 PRE-SERVICE INSPECTION

Check that the flue terminal and the terminal guard, (if fitted), are clear.

If the appliance is in a compartment, check that the ventilation openings in the compartment door or walls are clear. See Section 6 - Air Supply.

Check the system and remake any joints or fittings which show signs of leakage. Refill, vent and re-pressurise as described in Section 13.2.

Operate the appliance and the system taking note of any faults.

Measurement of the Flue Gases

For consistency of results of the flue gas measurements it is necessary to have a constant output and stationary equilibrium.

Switch on the appliance.

Switch to DHW and CH mode.

Hinge down the facia.

Turn the Mode Switch to the "Max." position.

Wait until the appliance reaches stationary equilibrium (approx. 10 minutes).

Insert the probe into the flue duct.

Expected measurements should be between:

CO: 0.0015 and 0.0025%.

CO_2: 4.5 - 5.5%.

After taking the measurement:

Turn the Mode Switch back to the "normal" position.

Put the facia back in to its normal position.

SAFETY

Disconnect the electrical supply at the mains and turn off the gas supply at the gas service cock on the appliance before servicing.

After completing the service always test for gas soundness as indicated in BS 6891.

15. 3 COMPONENT ACCESS

To carry out a full and comprehensive service of the appliance remove the following parts to gain access to the components which need to be checked or serviced.

(a) Cabinet Front Panel. Remove by lifting off the supports.

(b) Inner Casing Cover. Check that the electricity supply to the appliance is turned off. Remove the cabinet front panel. Unscrew the four screws securing the cover to the casing and lift off. See Fig. 21.

(c) Facia Panel. Check that the electricity supply to the appliance is turned off. Remove the cabinet front panel. Unscrew the two upper screws as shown in Fig. 21 and hinge down the facia taking care not to distort the pressure gauge capillary tube or electrical connections.

(d) Bottom panel. Hinge down the facia panel. Disengage the front edge of the bottom panel from the two clips and remove the bottom panel from the appliance.

(e) Flue Hood Assembly. Undo the two screws securing the flue hood. Lift and slide the flue hood assembly from the appliance. See Fig. 26. When refitting the hood ensure that the rear return edge passes under the lip at the rear of the combustion chamber.

(f) Combustion Chamber Front and Sides. Remove the inner casing cover. Slacken off to the end of the thread but do not remove the two wing nuts securing the combustion chamber. Unhook the securing rods out of the locating holes in the combustion chamber sides. Ease the combustion chamber front and side assembly clear of the appliance. Refer to Fig. 26.

(g) Burner Assembly. Remove the combustion chamber front and sides. Pull off the two spark electrode leads and disconnect the flame sense lead at the plastic connector under the inner casing. **NOTE:** The flame sensing lead is attached to the burner. When the burner is removed ensure this lead is fed through the inner casing. Remove the grommet seal to allow the plastic connection to pass through the inner casing. Unscrew the G $^3/_4$ union nut on top of the gas valve and retain the sealing washer. Unscrew the front burner fixing screw. Lift the burner and ease the union nut through the inner casing sealing grommet.

Remove the burner assembly clear of the inner casing.

Ensure the flame sensing lead passes through the base of the inner casing. See Fig. 27.

15. 4 SERVICE OF COMPONENTS

Clean the Main Burner. Brush the blade tops and mixing tube with a soft brush and check that all the flame ports are clear. Remove any blockages with a non-metallic brush. Inspect the injector and clean with a soft brush. Replace the injector if it appears damaged. Do not use a wire brush or anything likely to cause damage. Replace the spark and sense electrodes if they appear damaged.

Clean the Gas to Water Heat Exchanger. Cover the burner manifold hole in the combustion chamber bottom panel with a cloth. Clean the heat exchanger using a soft brush. Remove the deposits from the bottom of the combustion chamber. Do not distort any of the blades.

Combustion Chamber Insulation. Examine and replace any pads that are damaged. Remove any dust or deposits using a soft brush after first dampening the pads.

Reassemble the appliance in the reverse order.

Check that all components are in place and correctly fixed. Leave the cabinet front panel to be fitted after checking the operation of the appliance.

15. 5 TEST THE APPLIANCE

On completion of the service and reassembly of the appliance, check for gas soundness and the correct operation of the appliance as described in Section 13-Commissioning.

Refit the cabinate front panel and reset the controls to the users requirements.

Fig. 26. Appliance components and fixings (upper assembly).

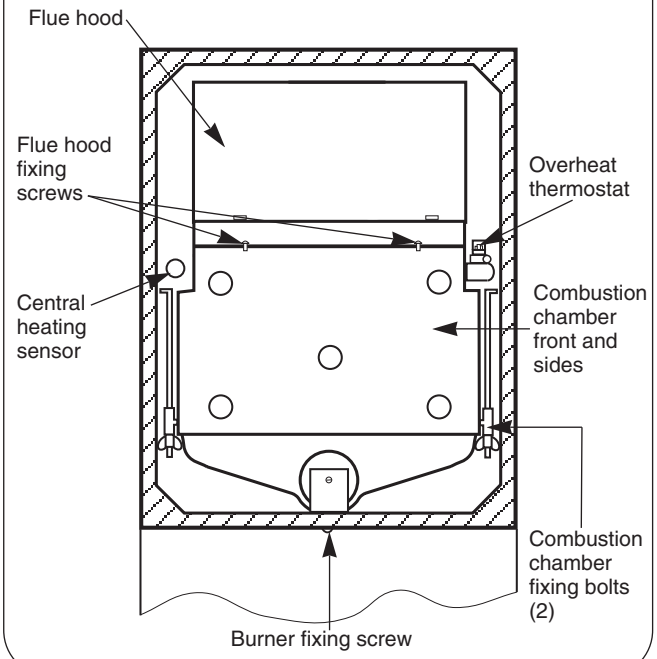

Fig. 27. Burner and Electrode

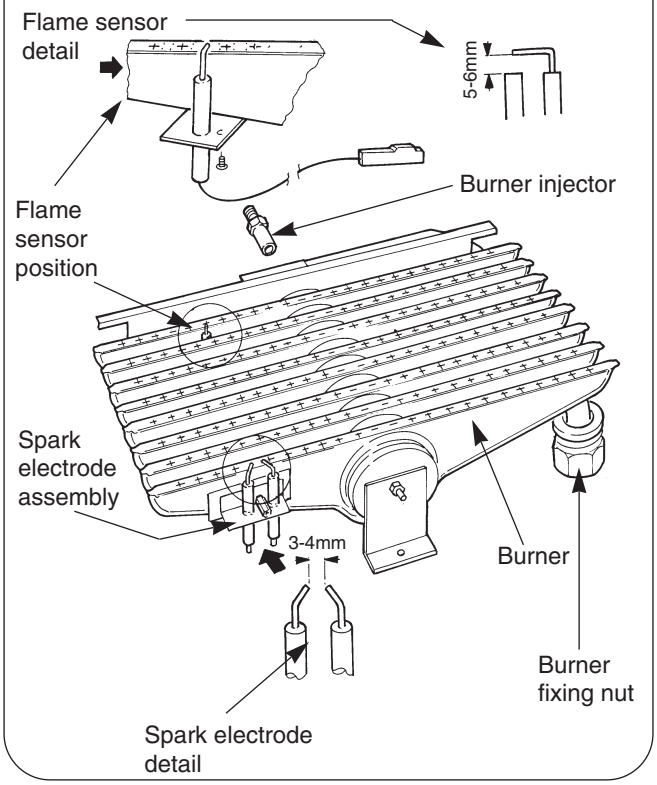

16. Replacement Of Parts

16.1 SAFETY

Switch off the electricity and gas supplies before replacing any components. After the replacement of any components, check for gas soundness where relevant and carry out functional checks as described in Section 13 - Commissioning

16.2 COMPONENT ACCESS

To replace components it is necessary to remove one or more sections of the cabinet and cover plates within the appliance as described in Section 15.3. Any 'O' ring or gasket that appears damaged must be replaced. Complete gasket and 'O' ring packs are available for the gas and water connections on the appliance. The facia panel may also need to be hinged down as described in Section 15.3, c.

16.3 DRAINING THE APPLIANCE

Check that the electricity supply to the appliance is turned off. Before removing any component holding water it is important that as much water as possible is removed from the appliance.

(a) Central Heating Circuit. Turn off the central heating flow and return valves at the appliance. Fit tubes to the drain taps on the flow and return manifolds and open the drain taps about one turn, make sure that the dust cap on the auto air vent is loosened. See Fig. 18. Close the drain taps when the flow has stopped. Be careful **not to overtighten** the drain taps. Some water will remain in the expansion vessel, pump, diverter valve, water to water and Gas to Water heat exchangers and extra care must be taken when removing these components.

(b) Domestic Hot Water Circuit. Turn off the mains cold supply valve at the appliance and open the lowest hot water tap. A quantity of water will remain in the Water to Water heat exchanger and the diverter valve and extra care must be taken when removing these components.

Replace any components removed from the appliance in the reverse order using new gaskets/'O' rings/sealant where necessary. Always check that any electrical connections are correctly made and that all screws are tight.

16.4 COMPONENT REPLACEMENT

1. Automatic Air Vent.

Remove the inner casing cover as described in Section 15.3 (b).

Drain the central heating circuit as described in Section 16.3 (a).

Remove the circlip and lift the assembly from the appliance.

Unscrew air vent from the pipe. Check the condition of the fibre washer.

Fit the replacement assembly, making sure the 'O' ring is in good condition.

Ensure that the circlip is correctly fitted and the dust cap is loosened.

Open the valves and fill and re-pressurise the system as described in Section 13.2.

2. Overheat Thermostat. .

Check that the electricity supply to the appliance is turned off.

Remove the inner casing cover as described in Section 15.3 (b).

Carefully pull off the two wires from the thermostat head.

Undo the two M3 screws and remove from the appliance.

Fit the replacement thermostat in the reverse order ensuring that some heat sink compound is between the thermostat and the plate.

Fig.28. Gas to water heat exchanger.

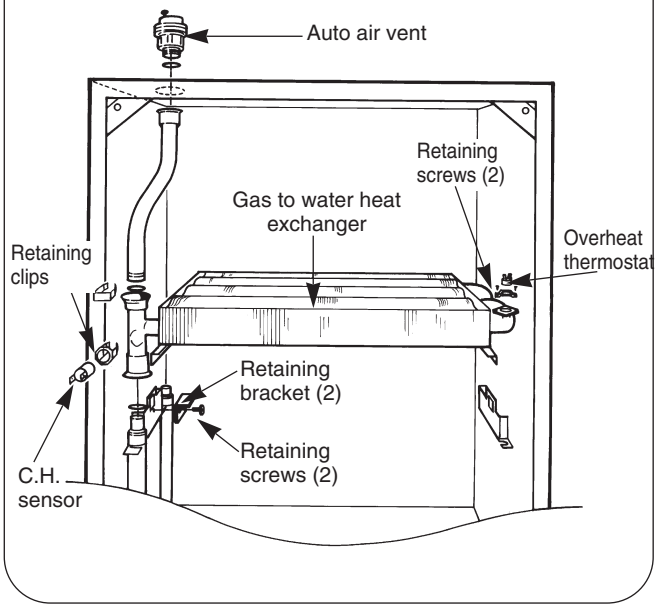

3. Gas to Water Heat Exchanger. Check that the electricity supply to the appliance is turned off.

Drain the central heating circuit as described in Section 16.3, a.

Remove the inner casing cover, overheat thermostat, central heating sensor, burner and automatic air vent assembly as described in Sections 15.3, b and g, 16.4, 1, 16.4, 2 and 16.4, 10. Pull down the flow pipe to free it from the heat exchanger. Disconect the return pipe from the return manifold, turn the pipe to clear the manifold and pull down the pipe to free it from the heat exchanger. The heat exchanger can now be pulled down free of the retaining clips securing it to the flue hood.

Take care that the rear insulation pad does not drop forwards onto the burner.

Fit the replacement heat exchanger in the reverse order ensuring that both the "O" rings are correctly fitted and lubricated and a layer of heat sink compound is on both the thermostats.

Open the valves and fill and re-pressurise the system as described in Section 13.2.

4. Combustion Chamber Insulation. Refer to Fig. 29.

Check that the electricity supply to the appliance is turned off.

Drain the central heating circuit as described in Section 16.3, a.

Remove the inner casing cover, combustion chamber, flue hood assembly, burner, and Gas to Water heat exchanger as described in Sections 15.3 ,b, e and g, and 16.4 ,3. Remove the fibre insulation pads from the combustion chamber side, rear, and front sections. To avoid the risk of fine particles dampen the pads before removal.

Fit the replacement pads in the reverse order taking care not to damage them.

Open the valves and fill and re-pressurise the system as described in Section 13.2.

Fig. 29. Combustion Chamber Insulation

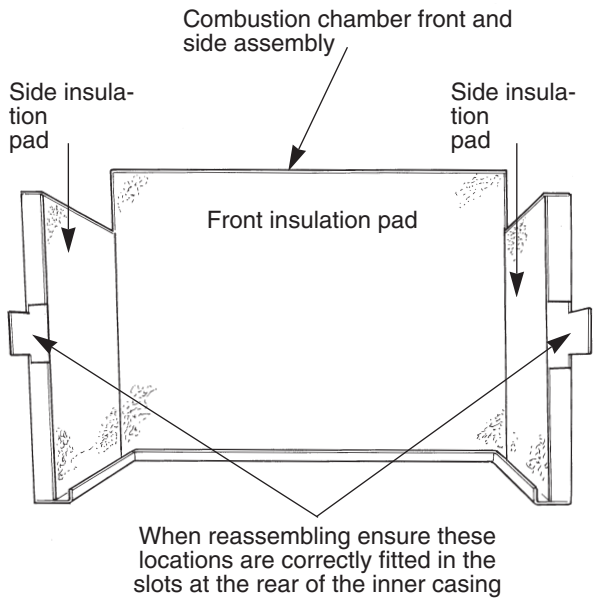

5. Burner. Refer to Fig. 27.

Check that the electricity and gas supplies to the appliance are turned off.

Remove the burner assembly as described in Section 15.3, g.

Fit the replacement burner in the reverse order taking care not to damage the electrode leads.

6. Burner Injector. Refer to Fig. 27.

Remove the burner as described in Section 15.3, g.

Unscrew the brass injector from the burner.

Fit the replacement injector in the reverse order.

7. Spark Electrode Assembly. Refer to Fig. 27.

Remove the combustion chamber front and sides as described in 15.3, f.

Carefully pull off the two electrode leads,

Undo the M4 extended nut and remove the spark electrode assembly from the burner.

Fit the replacement electrode in the reverse order, checking that the spark gap is 3 to 4mm.

8. Flame Sensor. Refer to Fig. 27.

Remove the burner as described in Sections 15.3, g and 16.4, 5.

Undo the M3 screw and remove the sense electrode from the burner.

Fit the replacement electrode in the reverse order, checking that the sense gap is 5 to 6mm.

9. Gas Valve. Refer to Fig. 23.

Check that the electricity and gas supplies to the appliance are turned off.

Hinge down the facia panel into the servicing position as described in Section 15.3, c.

Remove the air pressure switch bracket as described in Section 16. 3, 2.

Undo the two G¾ inch nuts on the gas valve and the two M4 screws on the gas valve bracket and withdraw the valve.

Whilst supporting the valve carefully pull off the three electrical solenoid plug connections.

Fit the replacement gas valve in the reverse order ensuring the sealing washers are correctly fitted.

Turn on the gas supply and check for soundness.

To set the burner pressure. Refer to Fig. 23.

The minimum and maximum burner pressure must be set after a new gas valve has been fitted.

Follow the procedure described in Section 13.4 - Appliance Operation.

The minimum burner pressure must be set first, since maximum is adjusted simultaneously.

Start the appliance in the domestic hot water mode as described in Section 13.4. - Appliance Operation.

Turn the gas mode switch on the rear of the facia to minimum.

Adjust the minimum pressure screw on the gas valve to give a burner pressure of 2.0mbar for natural gas.

Turn the gas mode switch on the rear of the facia to maximum.

Adjust the maximum pressure screw on the gas valve to give a burner pressure of 13.2mbar for natural gas.

Turn the gas mode switch on the rear of the facia to normal.

After completing the adjustments, check the minimum and maximum pressures and adjust as necessary.

Ensure the appliance lights in the central heating mode

It should not be necessary to alter the central heating potentiometer setting when the gas valve only is replaced and the minimum and maximum pressures are set.

10. Central Heating Sensor. Refer to Fig 28.

Remove the inner casing cover as described in Section 15.3, b.

Check that the electricity supply to the appliance is turned off.

Carefully pull off the two leads from the sensor.

Pull off the sensor and spring retaining clip from the pipe.

Fit the replacement sensor in reverse order with a layer of heat sink compound between the faces. Refit the leads.

11. Domestic Hot Water Sensor. Refer to Fig. 30,33.

Check that the electricity supply to the appliance is turned off.

Hinge the facia panel into the servicing position as described in Section 15.3, c.

Carefully pull off the two leads from the sensor.

Undo and remove the screw, pull off the sensor and spring retaining clip from the pipe.

Fit the replacement sensor in the reverse order ensuring a layer of heat sink compound is between the faces. Refit the leads.

12. Circulating Pump. Refer to Figs. 30,31.

Check that the electricity supply to the appliance is turned off.

Drain the central heating circuit as described in Section 16.3, a.

Hinge the facia panel into the servicing position as described in Section 15.3, c.

Undo the two union nuts and the pipe to the expansion vessel, remove the pump from the pipe-work. Support the pump and remove the electrical cover.

Disconnect the electrical wires taking note of their positions.

Fit the replacement pump in the reverse order using new sealing washers.

Alternatively replace the pump head only by removing the four Allen screws on the pump, remove the head and support whilst removing the electrical connections. Refit the new head.

Open the valves and fill and re-pressurise the system as described in Section 13.2.

NOTE: The direction of flow should be downwards. The speed should always be set to maximum.

13. Expansion Vessel. Refer to Figs. 30,32.
Drain the central heating circuit as described in Section 16.3, a.
Hinge the facia panel into the servicing position as described in Section 15.3, c.
Remove the gas to water heat exchanger, water to water heat exchanger and pump as described in 16.4, 3,12 and 18 and remove the vessel.
Fit the replacement vessel in the reverse order.
Open the valves and fill and re-pressurise the system as described in Section 13.2

14. Pressure Relief Valve. Refer to Fig. 22.
Drain the central heating circuit as described in Section 16.3, a.
Hinge down the facia panel as described in Section 15.3, c.
Remove the bottom panel as described in Section 15.3, d.
Pull out the retaining clip and remove the pressure gauge connection. Undo the discharge pipe connection and remove the valve taking care not to distort the pipework.
Fit the replacement valve in reverse order. Reconnect the discharge pipe.
Open the valves and fill and re-pressurise the system as described in Section 13.2.

15. Water Diverting Valve Micro Switch Assembly.
Refer to Figs. 30,33.
Check that the electricity supply to the appliance is turned off.
Hinge down the facia panel as described in Section 15.3(c).
Remove the bottom panel as described in Section 15.3(d)
Using a pair of fine nosed pliers, pull the circlip off and remove the micro switch assembly from the valve. Remove the black cover and carefully pull off the connections from the terminals on the micro switches.
Withdraw the switch assembly from the appliance.
Fit the replacement micro switch assembly in the reverse order.

Fig. 28. Appliance Components (lower assembly)

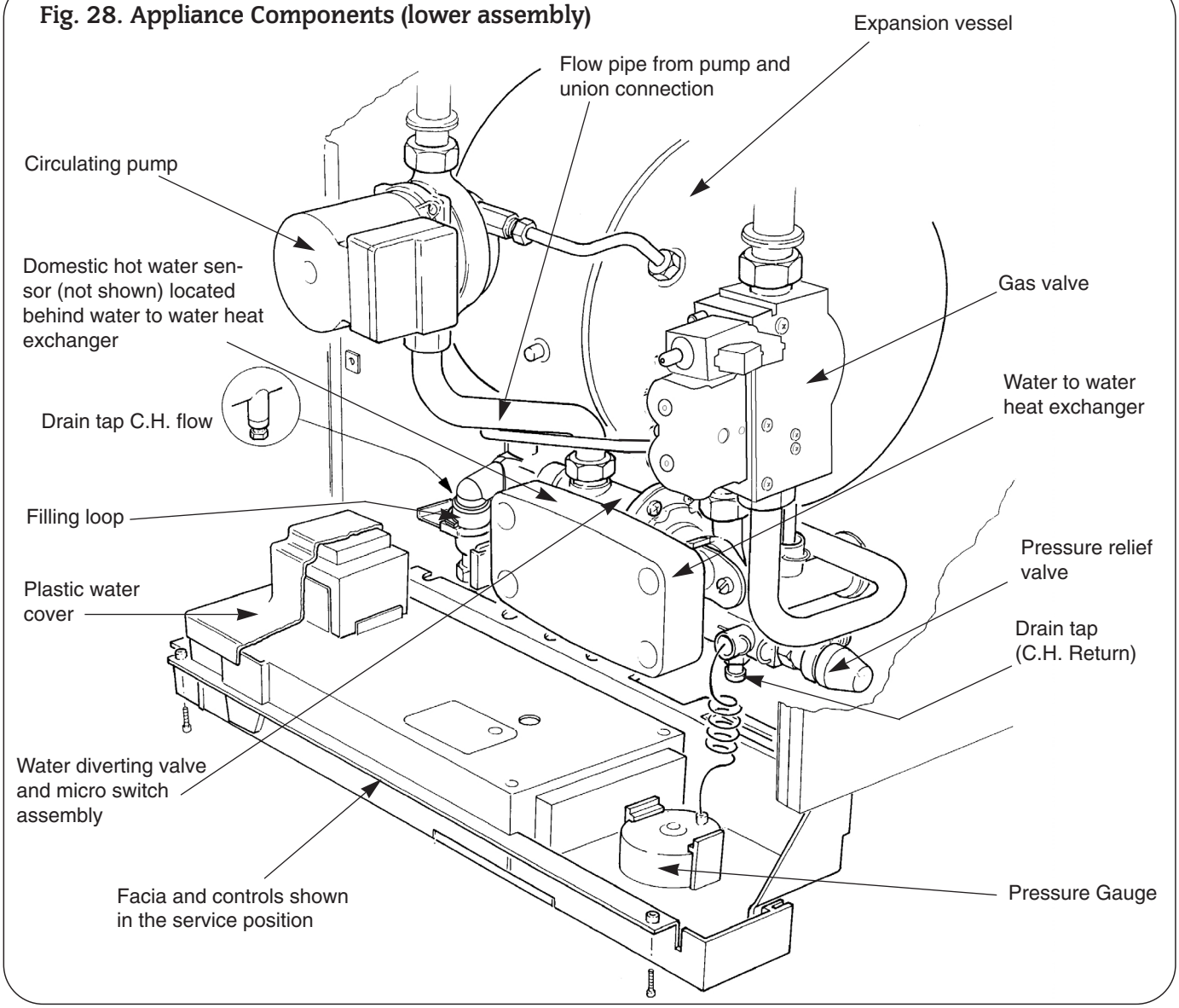

13. Commissioning

13.1 SUMMARY

The appliance is dispatched with the controls set to provide a maximum output for domestic hot water and central heating of 24 kW (81,900 Btu/h).

The appliance automatically modulates to satisfy lower heat loads.

Domestic Hot Water Circuit

Confirm that the mains water supply has been flushed out at installation. If not it will be necessary to disconnect the cold water inlet pipe from the appliance and thoroughly flush.

Central Heating System

Confirm that the system has been fully flushed out at installation using a flushing agent. Flush the system before starting to commission the appliance and, at the end of the commissioning procedure, add a suitable flushing agent and drain whilst hot. Immediately refill and re-pressurise.

Gas Service. The complete system, including the meter, must be inspected and tested for soundness and purged as indicated in BS 6891. In the event of a leak, or suspected leak, at the 'O' ring joint on the main appliance manifold, connect a manometer to the test point on the inlet of the multifunctional gas valve. A soundness test carried out after turning off the appliance gas cock will test the section between the gas cock and the gas valve, thus enabling the leak to be traced to either a visible joint or to the 'O' ring.

13.2 APPLIANCE AND CENTRAL HEATING SYSTEM – PREPARATION

Remove the cabinet front panel.

Check that the electrical supply and the gas service to the appliance are off.

Check that all the water connections throughout the system are tight.

Open the system valves at the appliance. Open all the radiator valves, fill the system and vent each radiator in turn.

Remove the bottom panel to gain access to the filling loop assembly. (The grey knob for the filling loop is packed in the hardware pack and should be fitted as shown in Fig. 6,6a.

Insert the bayonet end of the filling key into the corresponding cutouts in the filling loop housing and twist to lock the key in place.

Turn the grey knob anti-clockwise to allow water ingress and fill until the pressure gauge reads 2.5 bar.

Turn the grey knob clockwise to stop filling and remove the filling key by lining up the bayonet end of the key with the cutouts in the filling loop housing and withdrawing the key.

N.B. The key must always be removed from the filling loop housing after the system has been filled to prevent accidental filling and to comply with Byelaw 14 of the Water Byelaws Scheme.

Store the key in a safe place for future use and refit the bottom panel.

The automatic air vent will vent the appliance. Check that the air vent cap has been loosened. Refer to Fig. 28.

Check that the pressure relief valve operates by turning the knob anti-clockwise until it releases. Water should be expelled from the discharge pipe. Refer to Fig. 22.

Lower the facia panel to gain access. Refer to Section 15.3, c.

Set the Expansion Vessel Pressure

The charge pressure of the expansion vessel as dispatched is 0.5 bar, which is equivalent to a static head of 5 metres (17 ft). The charge pressure must not be less than the static head at the point of connection. Refer to Fig.18. A Schraeder type tyre valve is fitted to the expansion vessel to allow the charge pressure to be increased if necessary.

Set the System Pressure

Release water from the system using the relief valve test knob see Fig. 22, until the system design pressure is obtained, up to a maximum of 1.5 bar.

Initial system design pressure (bar) = Expansion vessel charge pressure + 0.3 bar.

NOTE: 1 bar is equivalent to 10.2 metres (33.5ft) of water.

Set the movable pointer on the pressure gauge to coincide with the indicating pointer giving a permanent record of the set system pressure.

If the pressure indicated on the pressure gauge is greater than 2.6 bar when operating at the maximum central heating temperature, an extra expansion vessel must be fitted to the system as close as possible to the appliance central heating return connection.

The appliance (as dispatched) can accommodate a system volume of about 83 litres. Refer to BS 7074 Part 1. If the system volume is in excess of that accommodated by the expansion vessel fitted to the appliance then an extra vessel must be fitted as close as possible to the central heating return connection of the appliance.

Any extra vessel fitted must be pressurised to the same figure as the integral vessel. If the expansion vessel fails then the specified replacement must be fitted.

13.3 PROGRAMMER

Any programmer fitted on the appliance should be set up at this stage following the instructions sent with the programmer.

The programmer will retain the setting for up to three weeks following an interruption in the electricity supply.

13.4 APPLIANCE OPERATION

Turn off the gas and electricity supplies to the appliance.

Loosen the burner pressure test point screw on the gas valve and connect a pressure gauge. See Fig. 23.

Undo the two screws and hinge down the facia to gain access to the mode switch.

Fig. 20. Appliance casing and control equipment fixings.

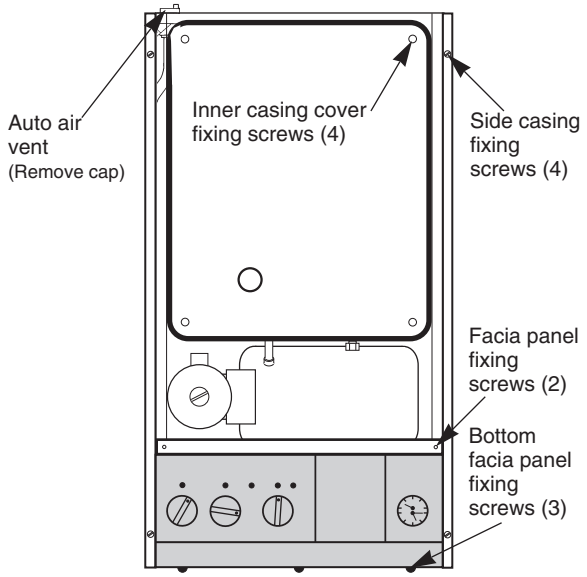

Domestic Hot Water

Set the gas valve mode switch, at the rear of the facia, to the maximum position.

Turn on the gas and electricity supplies.

Set the CH temperature control knob fully anti-clockwise to

and the DHW temperature to MAX.

Open a hot water tap.

A continuous ignition spark will occur until the burner is alight and sensed by the control circuit. The burner pressure should be 13.2mbar for natural gas. If the burner pressure cannot be achieved then check that the inlet pressure at the appliance is 20mbar for natural gas. This is equivalent to a 18.5-19.0 mbar (G20) at the gas valve.

17. Inlet Water Filter. Refer to Fig. 34.
Check that the electric supply to the appliance is turned off.
Drain the central heating and domestic circuits as described in Sections 16.2, a and b.
Hinge down the facia panel into the servicing position as described in Section 15.3, c.
Follow the procedures as described in Section 15.3,16 and remove the water diverting valve from the appliance.
Remove the water filter from the cold water inlet.
Discard or clean the filter.
Fit the replacement filter (push fit) in the reverse order.
Reassemble the appliance in the reverse order.
Open the valves and fill and re-pressurise the system as described in Section 13.2.

18. Water to Water Heat Exchanger. Refer to Fig. 34.
Check that the electricity supply to the appliance is turned off.
Drain the central heating and domestic hot water circuits as described in Sections 16.3, a and b.
Hinge down the facia panel into the servicing position as described in Section 15.3, c.
Remove the bottom panel as described in Section 15.3, d.
Remove the filling loop as described in Section 16.4, 21. Undo the diverter valve connection. Remove the bolt and circlip and pull the heat exchanger forward and away from the appliance.
Fit the replacement heat exchanger in the reverse order.
Open the valves and fill and re-pressurise the system as described in Section 12.2.

19. Domestic Hot Water Flow Restrictor.
Remove the water to water heat exchanger assembly as described in Section 15.4.18.
The plastic flow restrictor is located within the brass housing on the heat exchanger. Refer to Fig. 34.
Fit the replacement flow restrictor and reassemble in the reverse order ensuring the fibre washers and 'O' rings are in place.

20. Pressure Gauge. Refer to Figs. 30,34.
Check that the electricity supply to the appliance is turned off.
Drain the central heating circuit as described in Section 16.3, a.
Hinge down the facia panel into the servicing position as described in section 15.3, c.
Remove circlip and pull out the capillary sensing bulb in the return manifold.
Prise back the retaining clips securing the gauge to the facia panel and remove.
Fit the replacement gauge in the reverse order ensuring the "O" ring is in place.
Open the valves and fill and re-pressurise the system as described in Section 13.2.

21. Filling Loop. Refer to Fig. 34.
Check that the electricity supply to the appliance is turned off.
Drain the central heating circuit as described in Section 16.3, a.
Hinge down the facia panel into the servicing position as described in Section 15.3, c.
Remove the screw securing the filling loop to the underside of the water diverting valve.
Remove the clip retaining the filling loop to the plastic flow manifold.
Remove the wire clip joining the two sections of the filling loop and slide the air gap section in the direction of the arrow.
Remove from the appliance.
Fit the replacement assembly in the reverse order.
Open the valves and fill and re-pressurise the system as described in Section 13.2.

Fig. 34 Filling Loop, Water to Water Heat Exchanger and Domestic Hot Water Flow Regulator

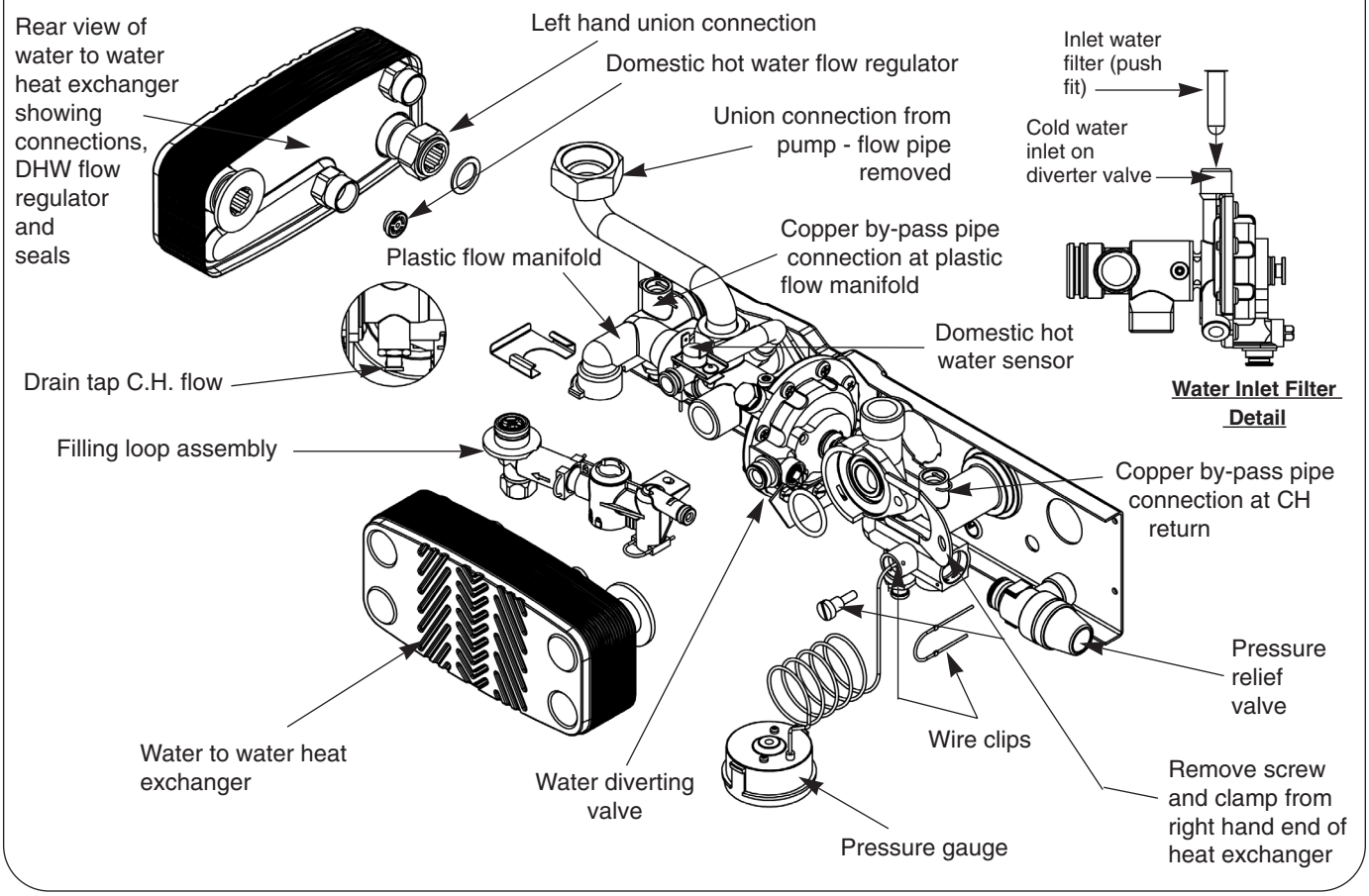

223. Control Board. Refer to Fig. 35.
Check that the electricity supply to the appliance is turned off.
Remove the three screws fixing the facia bottom panel to the facia. Remove the facia bottom panel. Retain the panel and screws.
Carefully pull off all the connectors. Disconnect the mains supply lead at terminal ST 12 and the earth connection at the back.
Pull off the three plastic control knobs. Take care not to damage the knobs when pulling off.
Retain the knobs.
Hinge down the facia panel into the servicing position as described in Section 15.3, c.
Remove the plastic water cover.
Remove the four corner screws on the back of the facia and separate the metal back panel from the plastic facia.
Ease off the two spark electrode lead connections.
Release the plastic catch at each of the four mounting posts pulling the control board forwards approximately 3mm to prevent the plastic catch from returning.
Pull the board off the remainder of the mounting posts until it is free.
Unplug the transformer from rear of the board. Discard the control board retain the transformer.
Plug in the transformer to the replacement control board. The transformer will fit in one direction only.
Locate the replacement control board over the four mounting posts and push back squarely until the plastic catch on the end of each post clicks into place.
Reassemble in the reverse order and ensure:

i) the spark electrode leads are re-connected. Polarity is not important.
ii) the connectors are fitted to the correct terminals.

Connectors are not interchangeable and will only fit the terminals from which they were removed.
Reassemble the facia panel and facia bottom panel in the reverse order. When replacing the control knobs ensure the knob with the shortest shaft is fitted to the left hand control position.

23. Transformer. Refer to Fig. 35.
Check that the electricity supply to the appliance is turned off.
Remove the control board as described in Section 16.4, 23.
Pull the transformer from the back of the control board.
Fit the replacement transformer in the reverse order.

Fig. 35. Rear of Facia in Servicing Position, Control Board and Transformer.

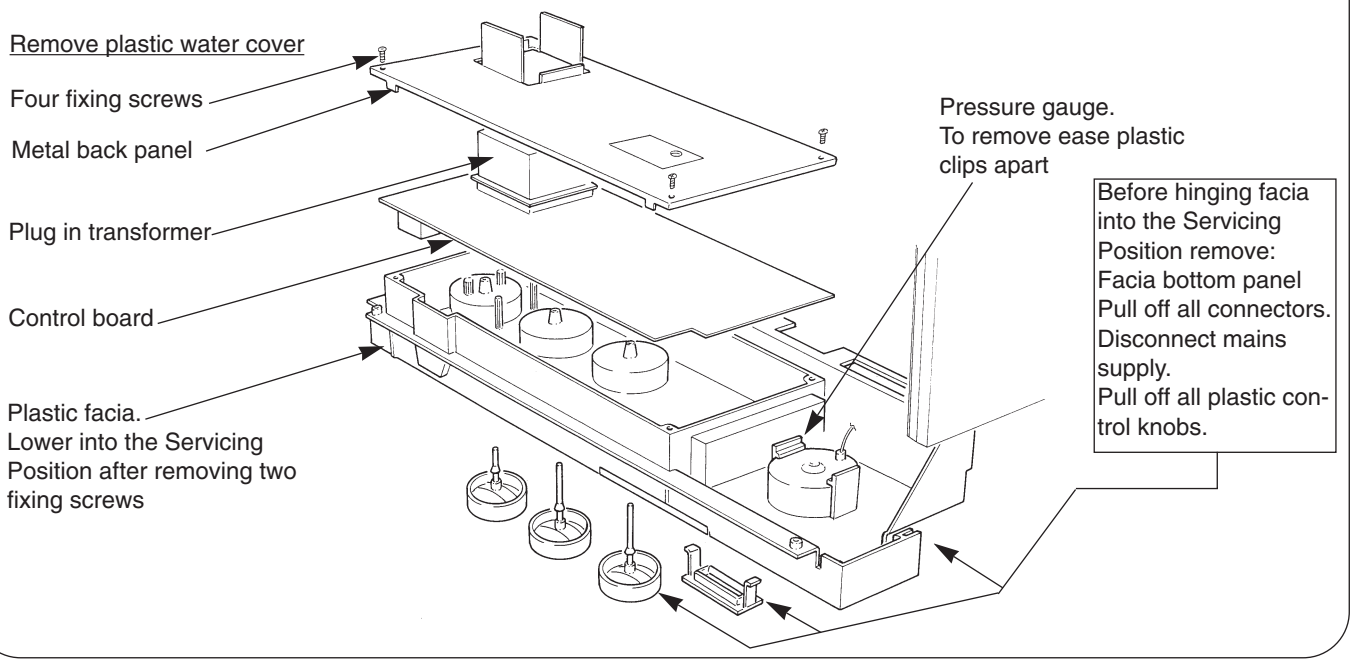

17. Short Parts List

Key No.	G.C. No.	Part	Manufacturer's Reference	Qty	WHS Part No.
26	E80 450	Gas Valve – Natural Gas	Dungs BM771 SL040	1	8 716 102 673 0
78	375 695	Burner – Natural Gas	Aeromatic, ref. AC 23/05 3582	1	8 716 142 602 0
80	173 091	Burner Injector – Natural Gas	Stereomatic, type 7, 4.5mm dia.	1	8 716 140 208 0
81	375 697	Spark Electrode Assembly	Buccleuch, ref. BE/3462/SI	1	8 716 142 100 0
82	E01 612	Flame Sensor	Buccleuch, ref. BE/3461/SI	1	8 716 120 345 0
95	299 515	Ignition Harness	Buccleuch, ref. BE/3469/SI	1	8 716 120 229 0
61	299 352	Gas to Water Heat Exchanger	Giannoni, ref. PR22 323 003, spec. D2107	1	8 716 142 800 0
68	E00 716	Automatic Air Vent	Intermes, ref. 02.05.010	1	8 716 140 500 0
85	299 506	System Pressure Gauge	Cewal, spec. D2111	1	8 716 142 300 0
40	375 699	Pressure Relief Valve	Caleffi, ref. 312439	1	8 716 142 404 0
29	173 006	Circulating Pump	Grundfoss, ref. 50 50 6601	1	8 716 143 100 0
25	173 001	Expansion Vessel	Zilmet, ref. 301010	1	8 716 142 500 0
42	299 353	Water to Water Heat Exchanger	Giannoni, ref. PVW 12 E, spec. D2108	1	8 716 142 900 0
34	173 005	Diverter Valve	Giannoni, ref. V37/OM/I/F/4/A spec D2109	1	8 716 142 401 0
104	379 215	DHW Flow Restrictor	Type E - White	1	8 716 141 054 0
105	378 416	Domestic Water Filter	MPM, V3326	1	8 716 148 400 0
109	E01 840	Charging Link Assembly	WHS	1	8 716 120 320 0
84	173 014	Circuit Board – OF/BF	Junkers Bosch, type Heatronic II KE	1	8 748 300 220 0
96	299 516	Transformer	ERA, Ref. BV 066-0188.0	1	8 747 201 248 0
60	375 696	Thermister Sensor	Elmwood, ref. 6655 - 9003 - 5	2	8 716 142 302 0
62	173 015	Overheat Thermostat	Elmwood, ref. 2455 R - 98 - 789	1	8 716 142 303 0
133	299 354	Combustion Chamber Insulation Pack	WHS	1	7 716 192 204 0
134	299 355	Fibre Washer Pack	WHS	1	7 716 192 205 0
135	299 356	'O' Ring Pack	WHS	1	7 716 192 207 0
136	299 357	Fuse Pack	WHS	1	7 716 192 206 0

Acccessories For 24CDi BF

G.C.No.	Part	WHS Part No.
E01 064	BF Standard Terminal 225mm- 420mm	7 716 191 007
E01 065	BF Extended Terminal 420mm- 560mm	7 716 191 008
299 361	Digital Single Channel Programmer	7 716 192 003
299 360	Mechanical Single Channel Programmer	7 716 192 002
E01 053	Digistat CD (Radio Controlled Room Thermostat)	7 716 192 006
E00 748	BF Open Vent Kit	7 716 192 108
	Pre-system Filling Loop	7 716 192 102
	Mini Expansion Vessel	7 716 192 105

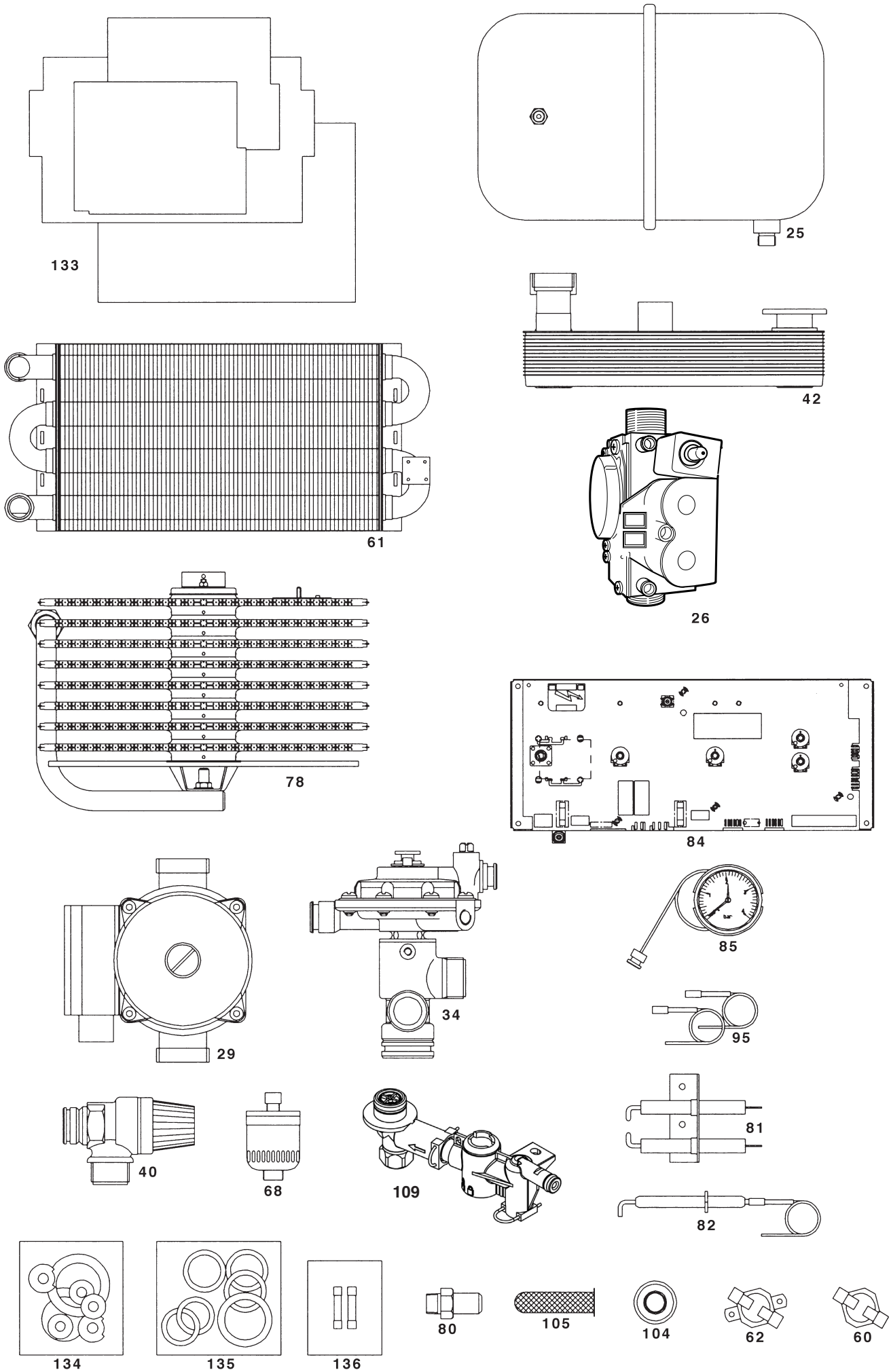
133
25
42
61
26
78
84
29
34
85
95
40
68
109
81
82
134
135
136
80
105
104
62
60

18. Operational Flow Diagrams

CENTRAL HEATING FUNCTION

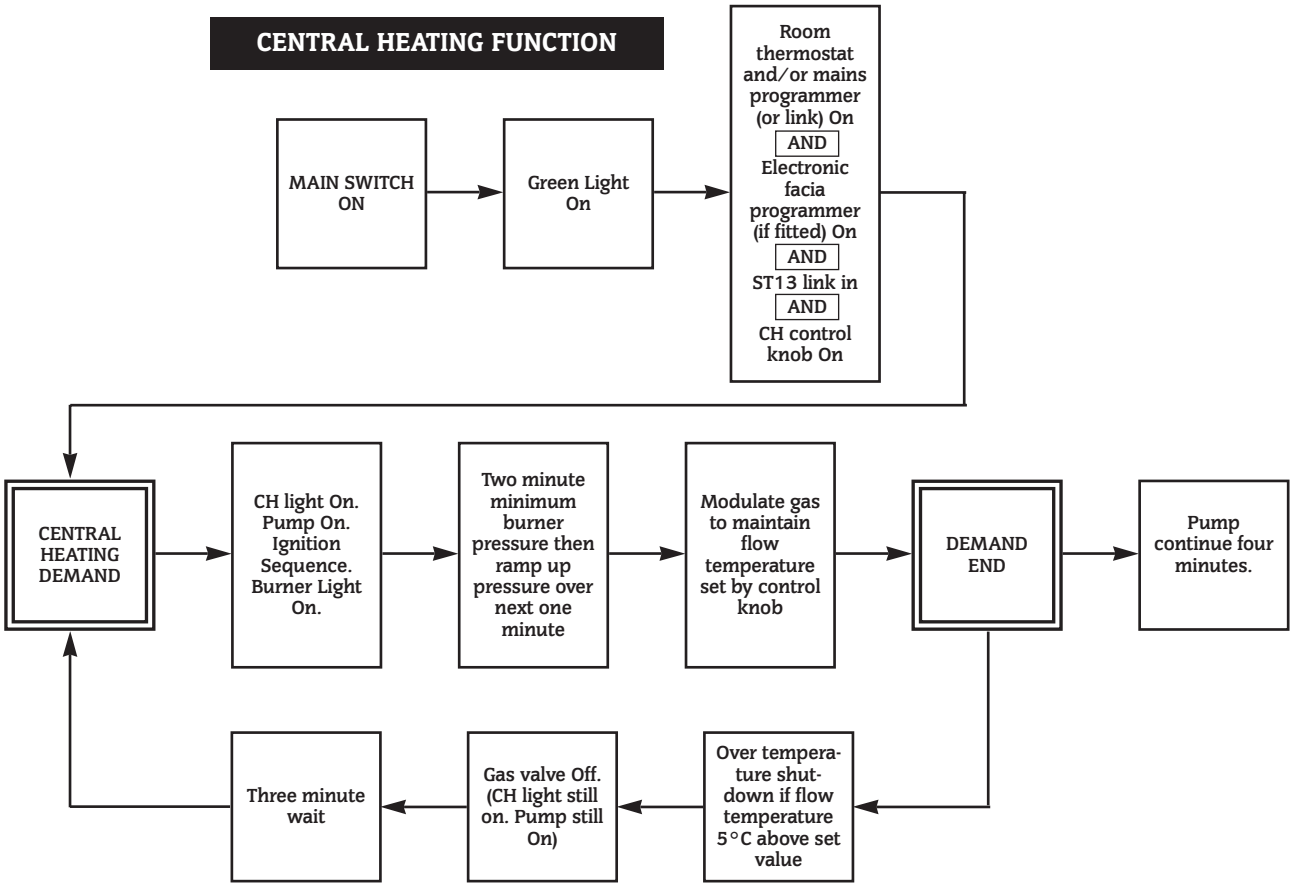

DOMESTIC HOT WATER FUNCTION

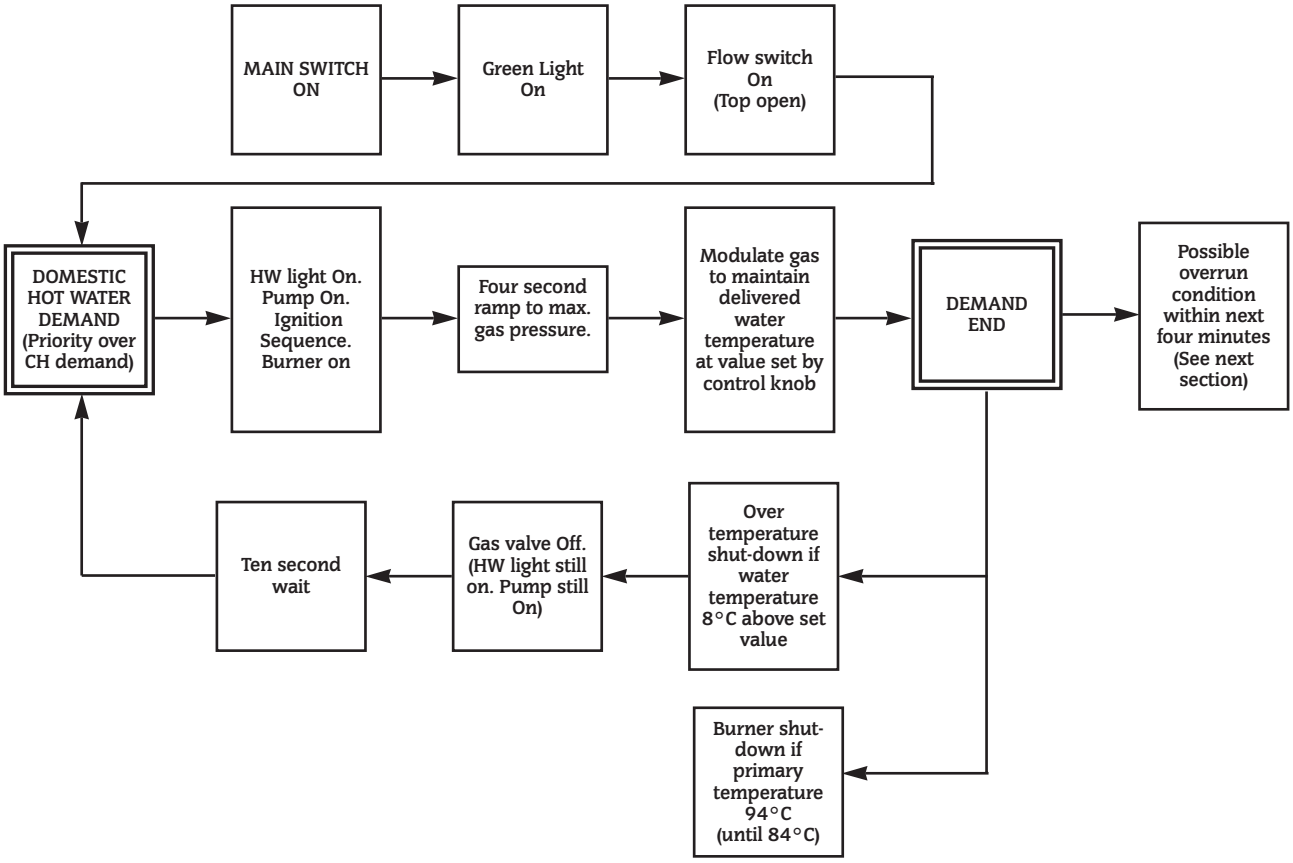

OVERRUN FUNCTION

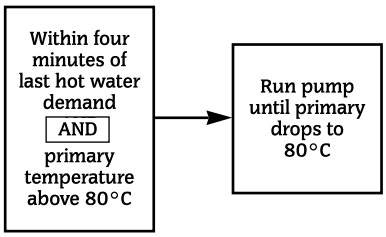

AUTOFROSTAT FUNCTION

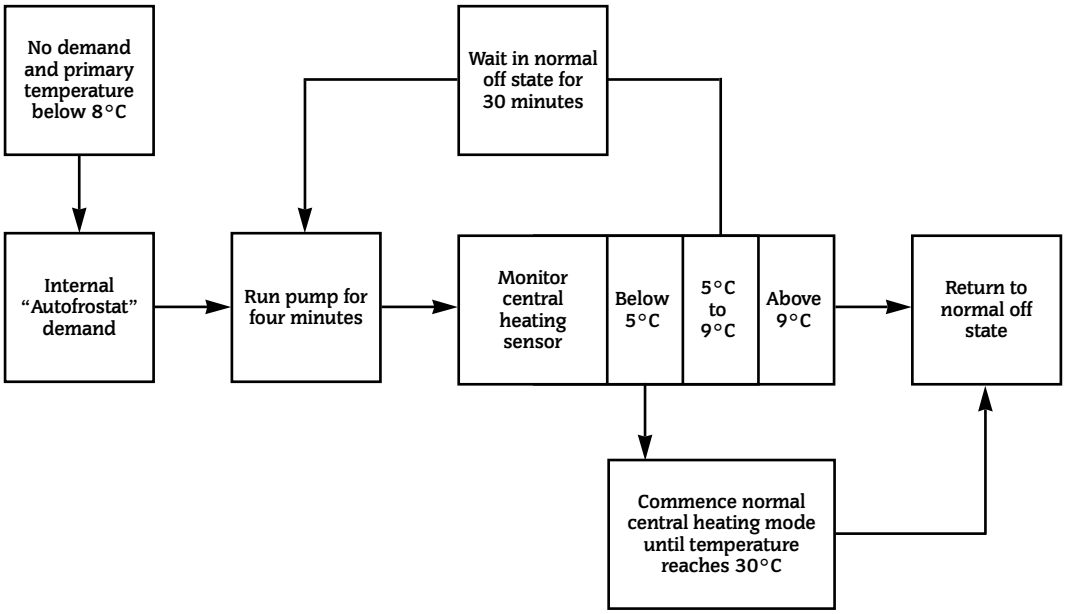

19. Fault Finding

Note: This fault-finding information is for guidance only. Worcester Heat Systems cannot be held responsible for costs incurred by persons not deemed to be competent.

The electronic control system for this boiler incorporates four lights on the facia. These are used to show normal operating status. But as a secondary function, by flashing, they can also be used to help provide fault diagnostics. Therefore, with individual or groups of lights being permanently off, on or flashing, every normal fault can be identified.

To use the fault finding system, select a box below which represents the light situation during your fault. Then refer to the appropriate following section. This fault-finding system assumes that the appliance has been operating correctly until the time of failure.

PRELIMINARY CHECKS

Preliminary electrical system checks are the first electrical checks to be carried out during a fault-finding procedure. On completion of the Service/Fault-Finding task which has required the breaking and remaking of electrical connections, check (a) EARTH CONTINUITY, (b) SHORT CIRCUIT CHECK, (c) POLARITY and (d) RESISTANCE TO EARTH.

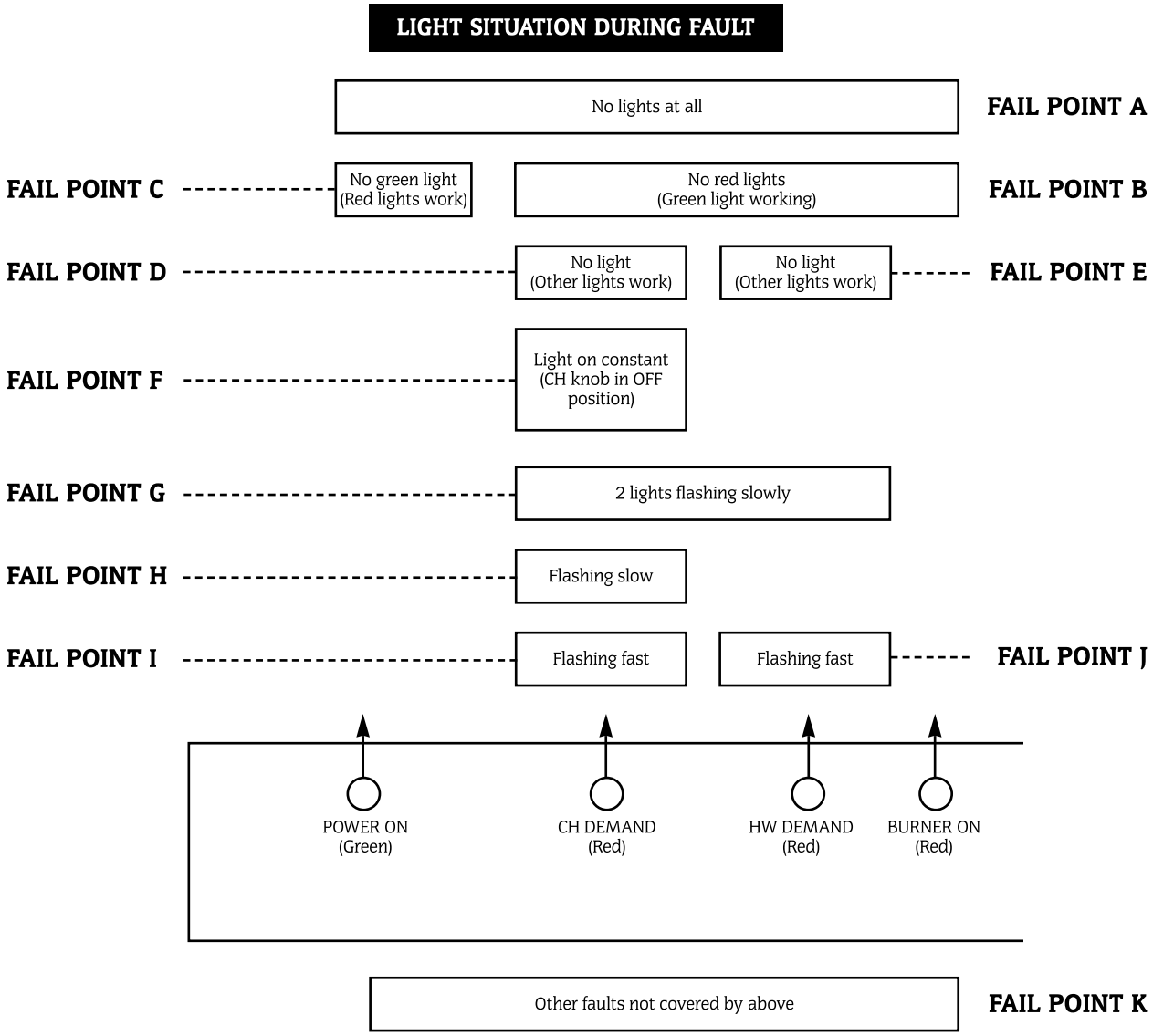

Note:

Slow flash is once per second, fast flash is five times per second.

Slow flash can only be cleared by using the facia reset button (press for at least one second).

Fast flash is cleared by removing fault and/or main switch off/on.

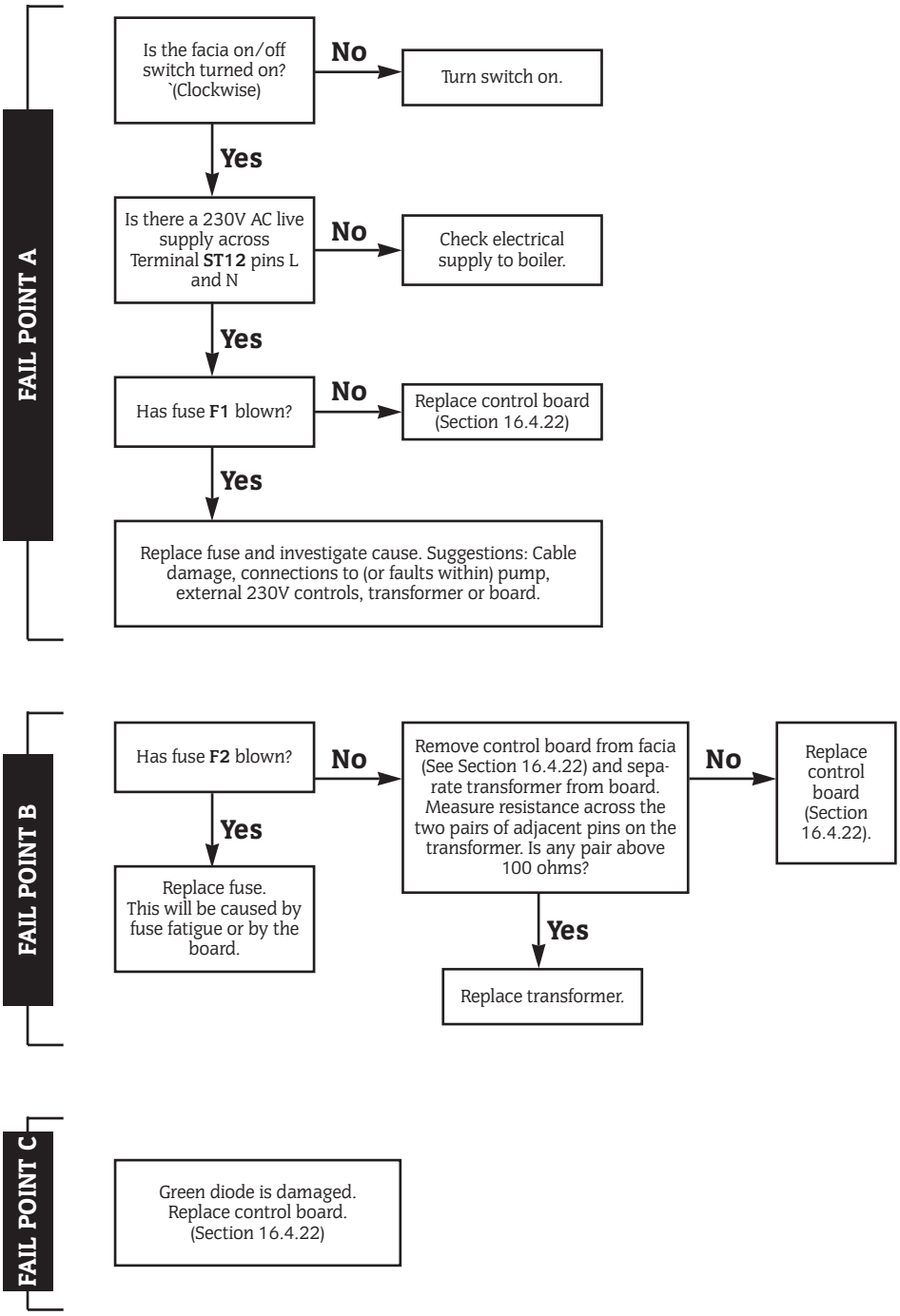
FAIL POINT A
Is the facia on/off switch turned on? `(Clockwise)
No
Turn switch on.
Yes
Is there a 230V AC live supply across Terminal ST12 pins L and N
No
Check electrical supply to boiler.
Yes
Has fuse F1 blown?
No
Replace control board (Section 16.4.22)
Yes
Replace fuse and investigate cause. Suggestions: Cable damage, connections to (or faults within) pump, external 230V controls, transformer or board.
FAIL POINT B
Has fuse F2 blown?
No
Remove control board from facia (See Section 16.4.22) and separate transformer from board. Measure resistance across the two pairs of adjacent pins on the transformer. Is any pair above 100 ohms?
No
Replace control board (Section 16.4.22).
Yes
Replace fuse. This will be caused by fuse fatigue or by the board.
Yes
Replace transformer.
FAIL POINT C
Green diode is damaged. Replace control board. (Section 16.4.22)

FAIL POINT D

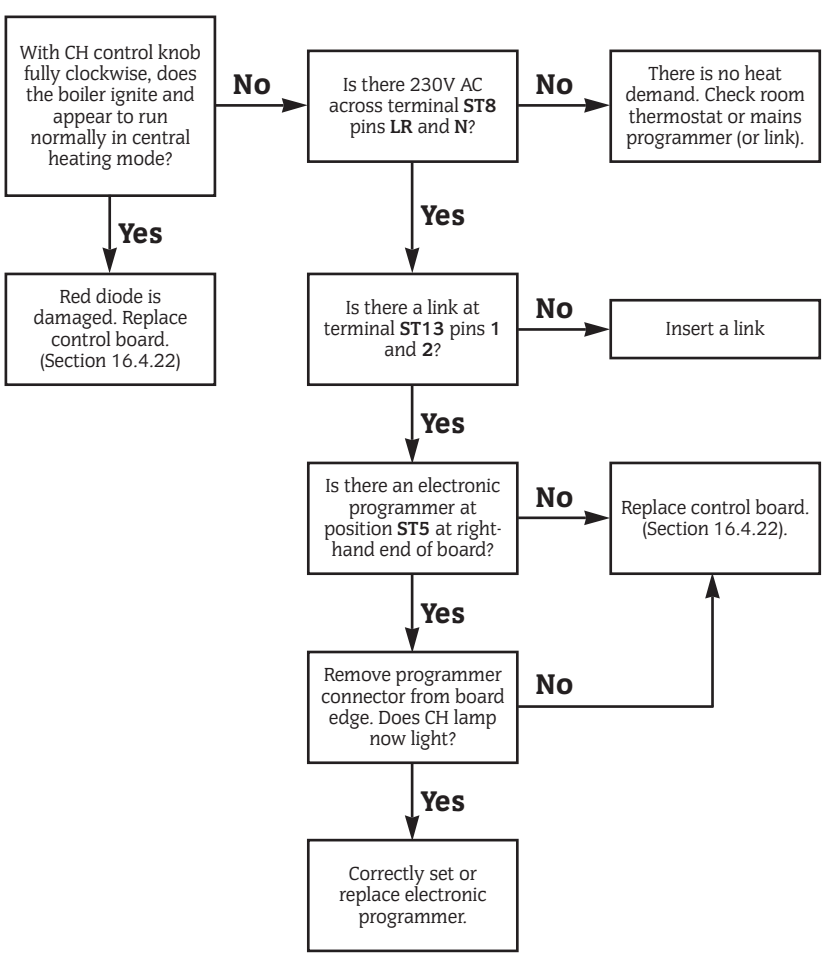

FAIL POINT E

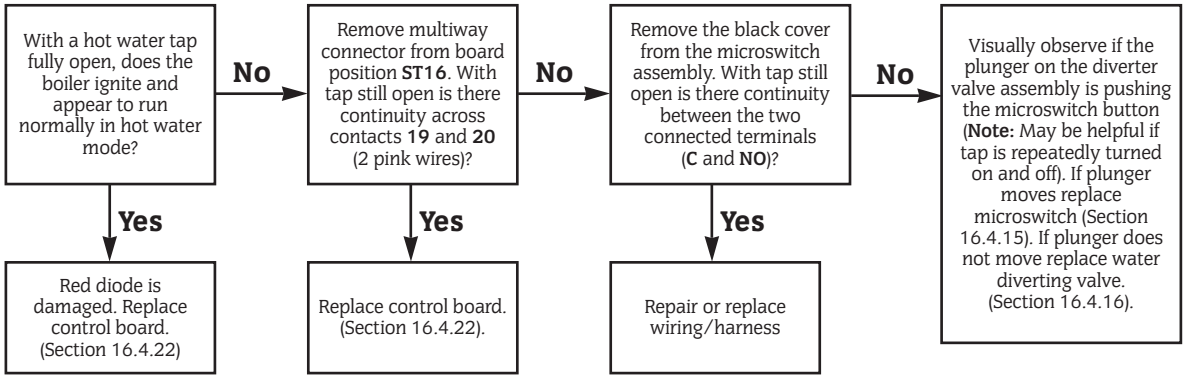

FAIL POINT F

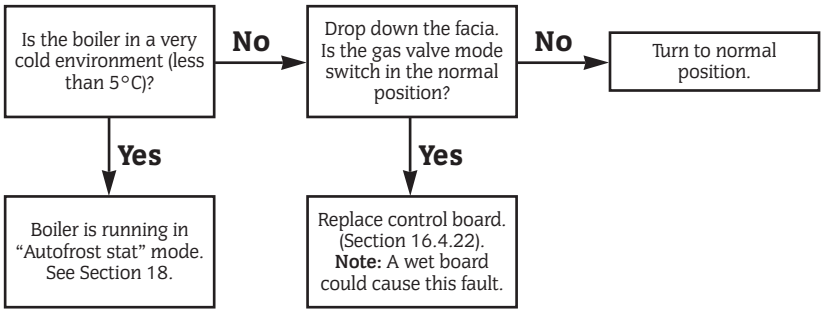

FAIL POINT G "Primary Overheat"

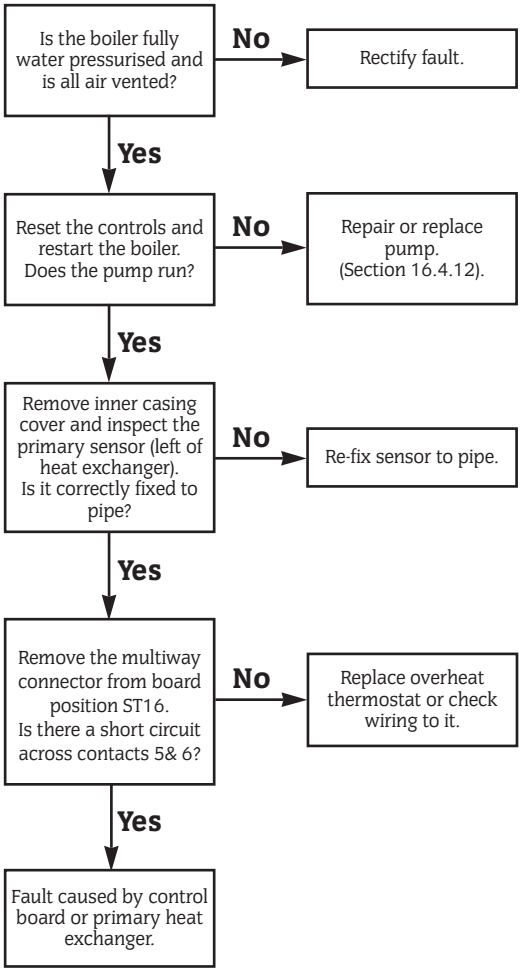

FAIL POINT H "Burner Lockout"

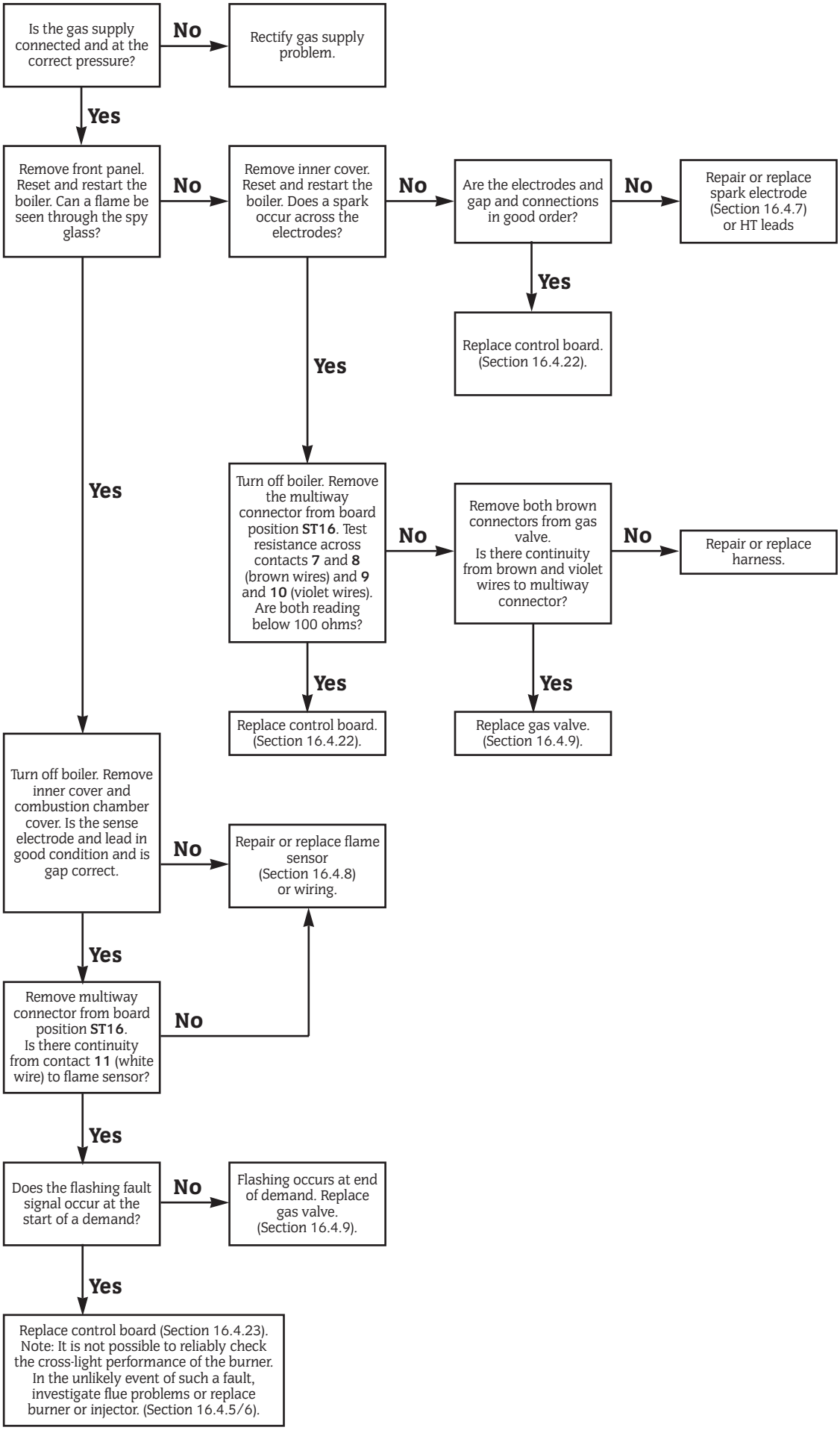

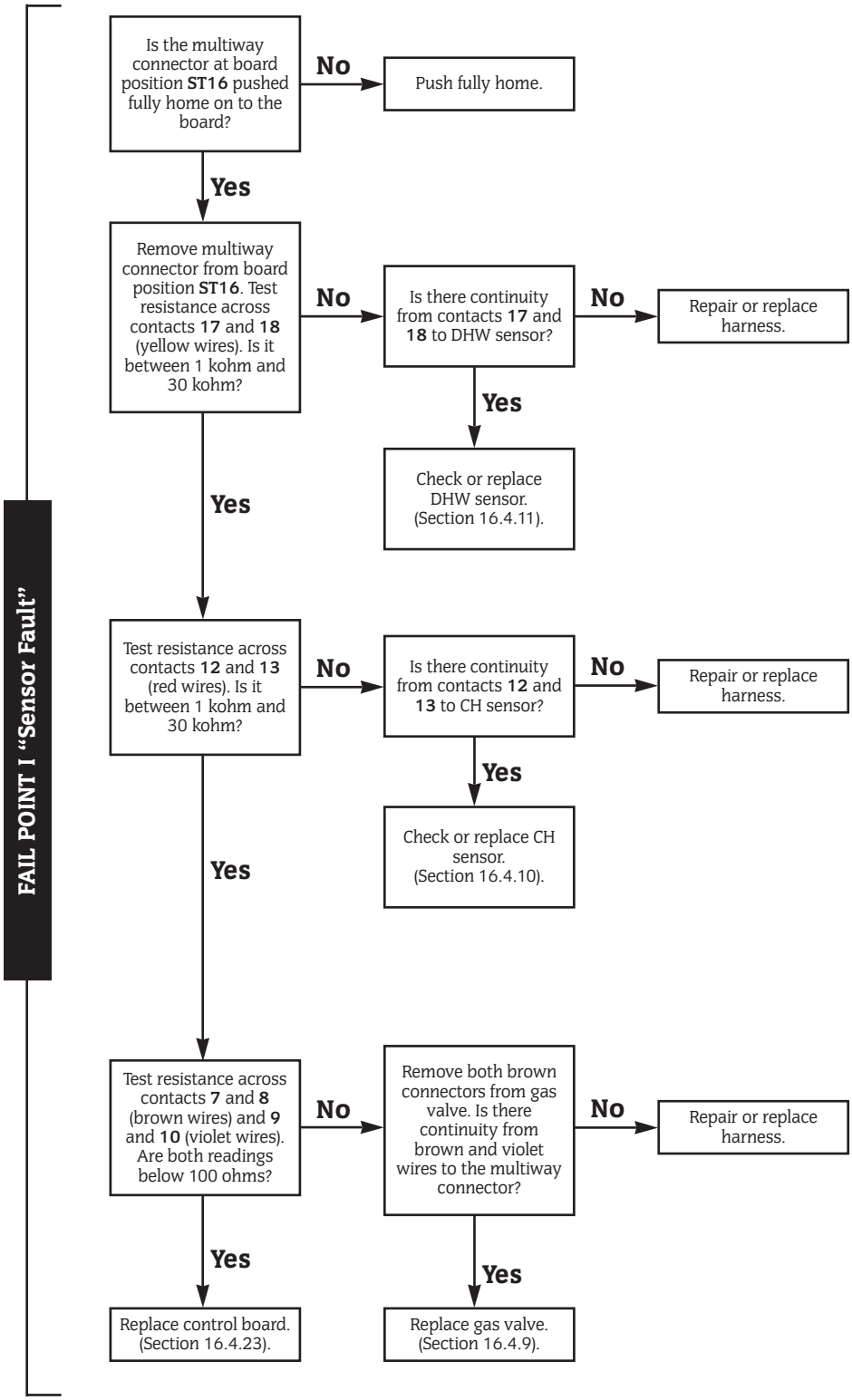
FAIL POINT 1 "Sensor Fault"
Is the multiway connector at board position ST16 pushed fully home on to the board?
No
Push fully home.
Yes
Remove multiway connector from board position ST16. Test resistance across contacts 17 and 18 (yellow wires). Is it between 1 kohm and 30 kohm?
No
Is there continuity from contacts 17 and 18 to DHW sensor?
No
Repair or replace harness.
Yes
Check or replace DHW sensor. (Section 16.4.11).
Yes
Test resistance across contacts 12 and 13 (red wires). Is it between 1 kohm and 30 kohm?
No
Is there continuity from contacts 12 and 13 to CH sensor?
No
Repair or replace harness.
Yes
Check or replace CH sensor. (Section 16.4.10).
Yes
Test resistance across contacts 7 and 8 (brown wires) and 9 and 10 (violet wires). Are both readings below 100 ohms?
No
Remove both brown connectors from gas valve. Is there continuity from brown and violet wires to the multiway connector?
No
Repair or replace harness.
Yes
Replace control board. (Section 16.4.23).
Yes
Replace gas valve. (Section 16.4.9).

FAIL POINT J "Internal Fault"

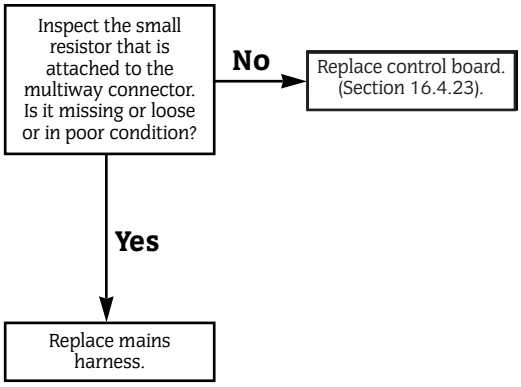

FAIL POINT K

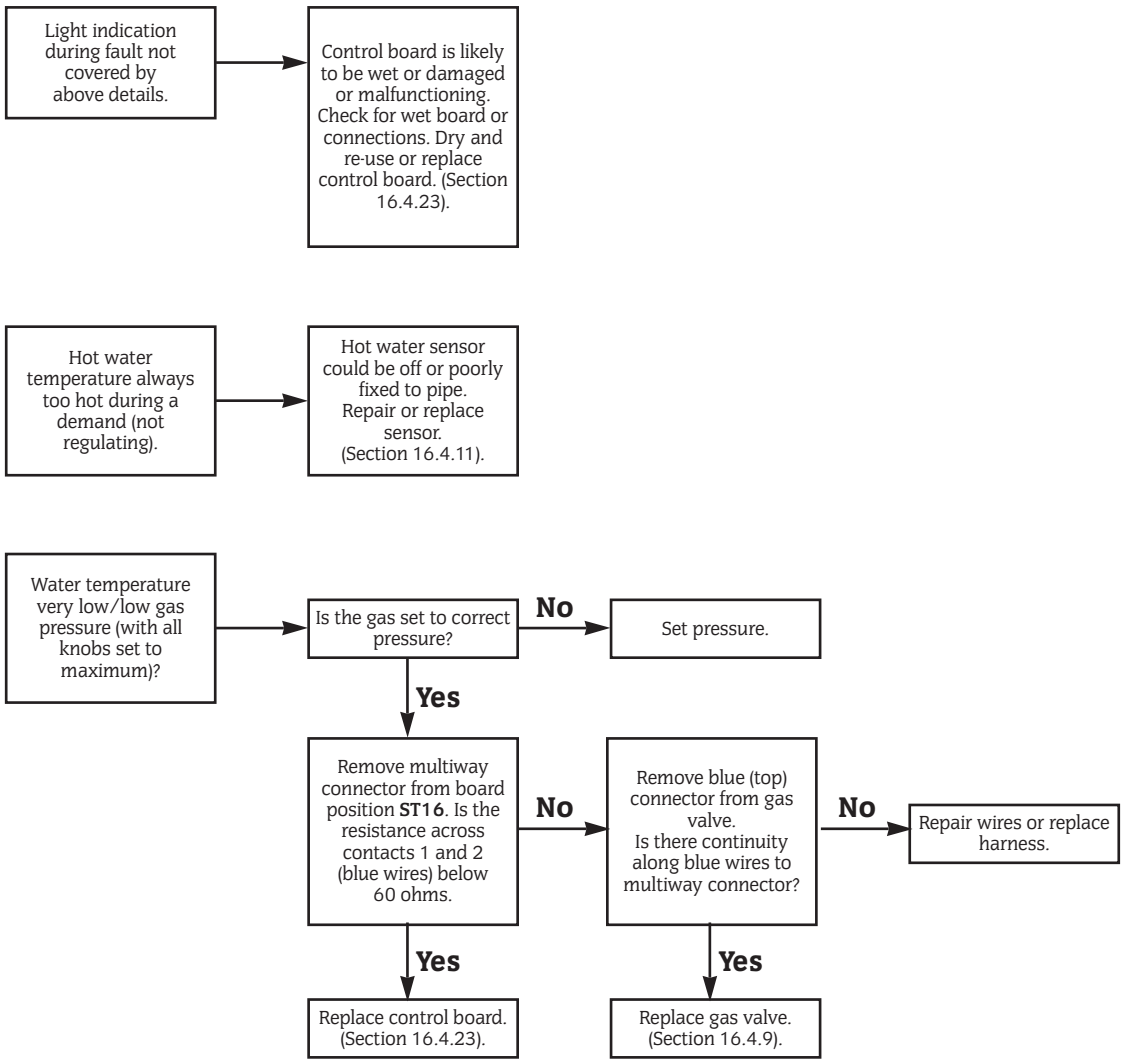

This manual is to be used in conjunction with the variant part number of the bar code below:

8716120257

WORCESTER

Bosch Group

Worcester Heat Systems Limited, Cotswold Way, Warndon, Worcester WR4 9SW.
Telephone: (01905) 754624. Fax: (01905) 754619.
Technical Helpline 08705 266241.
www.worcester-bosch.co.uk

PUBLICATION 8 716 145 063L 01/03

WORCESTER

Bosch Group

24CDi OF

WALL MOUNTED COMBINATION BOILER FOR CENTRAL HEATING AND MAINS FED DOMESTIC HOT WATER

INSTALLATION AND SERVICING INSTRUCTIONS

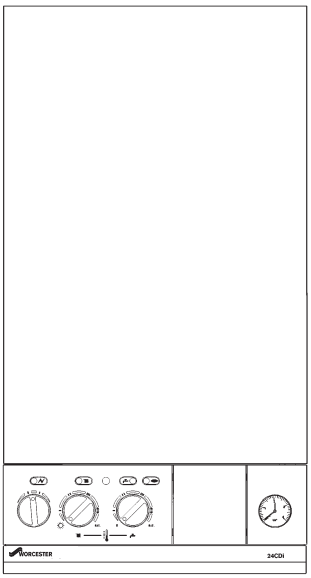

GC NUMBER 47 311 32 (N.G)
GC NUMBER 47 311 33 (L.P.G.)

benchmark™

Worcester Bosch supports the Benchmark code of practice

BOILER OUTPUT

Automatic Modulating Control

To Domestic Hot Water and Central Heating

Minimum 9.0 kW

Maximum 24.0 kW

IMPORTANT: THESE INSTRUCTIONS APPLY IN THE UK ONLY

THESE INSTRUCTIONS ARE TO BE LEFT WITH THE USER OR AT THE GAS METER

This appliance must be installed by a competent person in accordance with the Gas Safety (Installation and Use) Regulations 1998

Contents

1. Installation Regulations

1.1 Gas Safety (Installation & Use) Regulations 1998 (Amended 1998) : It is the law that all gas appliances are installed by a competent person in accordance with the above regulations. Failure to install appliances correctly could lead to prosecution. It is in your interest, and that of safety, to ensure compliance with the law.

1.2 The manufacturers notes must not be taken, in any way, as overriding statutory obligations.

1.3 The compliance with a British Standard or European Norm does not, of itself, confer immunity from legal obligations.

1.4 The installation of the appliance must be in accordance with the relevant requirements of the Gas Safety Regulations, current IEE Regulations, Building Regulations, Building Standards (Scotland) and local water bye-laws.

1.5 The installation should follow the recommendations of the following British Standards unless otherwise indicated:

BS6798 - Specification for the installation of gas fired hot water boilers of rated input not exceeding 60kW (Gross).

BS5449 - Central heating for domestic premises.

BS5546:1 - Installation of gas hot water supplies for domestic purposes.

BS5440/1 - Flues and ventilation for gas appliances of rated input not exceeding 60kW (Gross): Flues.

BS5440/2 - Flues and ventilation for gas appliances of rated input not greater than 60kW (Gross): Air supply.

BS 5482 - Domestic butane and propane gas burning installations - permanent dwellings.

BS6891 - Installation of low pressure gas pipework installations upto 28mm (R1).

BS6700 - Domestic water supply in buildings.

BS7593 - Water treatment in domestic heating systems.

1.6. To ensure that the installation will perform to the highest standards, the system and components should conform to any other relevant standards.

1.7. The appliance and/or components conform, where applicable, with the Essential Requirements of the Gas Appliance Directive, the Boiler Efficiency Directive, the EMC Directive and the Low Voltage Directive.

1.8. In accordance with the requirements of COSSH the appliance does not contain any substances which are harmful to health.

1.9. Product Liability regulations indicate that, in certain circumstances, the installer can be held responsible, not only for mistakes on his part but also for damage resulting from the use of faulty materials. We advise that, to avoid any risk, only quality approved branded fittings are used.

1.10. LPG Installation. The appliance shall not be installed in a room or internal space below ground level when it is intended for use with LPG. This does not preclude the installation into rooms which are basements with respect to one side of the building but open to the ground on the opposite side.

1.11. The advice and instructions given in this document covers, as far as possible, the foreseeable situations which may arise. Contact Worcester Heat Systems Technical Department, Telephone: 08705 266241, for advice on specific installations.

2. General Information

2.1. General Information

2.1.1. The appliance is set to give a maximum output of 24kW to the domestic hot water and to the heating system. The hot water flow rate is limited to a nominal 9 l/min at a maximum temperature rise of 40°C.

2.1.2. The sanitary water section of the appliance is suitable for water mains pressures of upto 10bar.

2.1.3. Conversion kits are available to convert the appliance from Natural Gas to Propane operation and vice versa. The kits include conversion instructions.

2.2 Electrical Supply

Mains supply: 230V ~ 50 Hz. 140Watts.

External fuse: 3A (BS 1362). Internal fuses: T 2A (F1), and T 1.25A (F2).

2.3 Gas Supply

Check the data plate (located on the inner cover of the appliance) to ensure the appliance has been set up for the correct gas supply. The appliance can be set up for either of the following gases: Natural gas (G20) or Propane (G31). **A conversion kit including instructions is available to change the appliance from one gas to the other.**

The boiler requires 2.9m^3/h (100ft^3/hr) of natural gas (G20) or 1.13m^3/hr (38.8ft^3/hr) of propane gas (G31). The gas meter and supply pipes must be capable of supplying this quantity of gas in addition to the demands of any other appliances being served.

The meter governor or regulator should deliver a dynamic pressure of 20mbar (8in wg) for natural gas or 37mbar (14.4 in wg) for propane at the appliance, which is about 18.5mb or 35.5 mbar at gas valve inlet pressure test point.

The complete installation, including the gas meter, must be tested for soundness and purged. Refer to BS 6891.

2.4 Packing

The appliance and flue components are packed in separate cartons.

2.5 Installation

The appliance is suitable for indoor installations only.

An open vent feed pipe assembly kit is available.

A wall-spacing frame to allow pipe runs behind the appliance is available.

An inlet water filter is fitted to the mains cold water inlet on the appliance.

The appliance is fitted with a system filling link assembly. See Page 8.

The appliance is suitable for connection to a sealed or open vented primary system.

The specified ventilation openings made into a wall or compartment door must not be obstructed.

If the appliance is to be fitted into a compartment then the compartment must conform to the requirements of BS 5440:2:1989.

Do not place anything on top of the appliance.

The clearances specified for servicing must be maintained.

Refer to Fig. 2.

2.6 Flue

The flue must be generally vertical and have no horizontal runs.

The flue must end with a BG plc approved terminal.

2.7 Controls

The ON/OFF switch will turn the mains electricity on and off at the appliance.

The electronic control system and gas valve modulate the heat input in response to the central heating and domestic hot water temperature settings.

The Central Heating Temperature control knob provides for the selection of domestic hot water only (turned fully anti-clockwise) or central heating and domestic hot water (turned clockwise).

The position of the Domestic Hot Water control knob will determine the temperature of the water delivered to the tap or shower or bath.

A facia mounted programmer is available as an optional extra. A remote mounted programmer may be connected to the appliance.

The integral facia displays indicate the status of the appliance.

There is provision for the connection of a mains voltage room thermostat and/or a frost thermostat.

The electronic controls prevent rapid cycling of the appliance in the central heating mode.

2.8 System Notes

IMPORTANT

Check that no dirt is left in either the gas or water pipework as this could cause damage to the appliance. Thoroughly flush the heating system and the cold water mains supply in accordance with the recommendations of BS7593: 1992.

The water pipe connections throughout a sealed system must be capable of sustaining a pressure of up to 3 bar.

Radiator valves must conform to the requirements of

BS 2767:1991.

The relief valve discharge must be directed away from any electrical components or where it would cause a hazard to the user.

A drain cock to BS 2879 must be fitted to the lowest point of the system.

For circuit design purposes it is important that due note is taken of the information given in Table 3 relating to the available pump head.

2.9 Showers, Bidets, Taps and Mixing Valves

Hot and cold taps and mixing valves used in the system must be suitable for operating at the mains pressure.

Thermostatically controlled shower valves will guard against the flow of water at too high a temperature.

If a pressure equalising valve is used, set the Domestic Hot Water temperature control knob to the 'MAX' position.

Hot and cold mains fed water can be supplied direct to an over-rim flushing bidet subject to local Water Company requirements.

With all mains fed systems the flow of water from the individual taps will vary with the number of outlets operated simultaneously and the cold water mains supply pressure to the property. Flow balancing using 'Ball-o-Fix' type valves is recommended to avoid an excessive reduction in flow to individual outlets. For further information contact Worcester Heat Systems Technical Helpline.

2.10 Safety Considerations

The appliance must not be operated in a waterless condition.

The appliance must not be operated with the boiler inner casing cover removed.

Work must not be carried out on the appliance without the gas and electricity supplies being switched off.

Checks must be made to ensure that, where applicable, the ventilation openings made into walls and partitions are of the correct size and are not obstructed.

IMPORTANT: Where back-flow prevention devices, including water meters, are fitted the expansion of hot water into cold water main can be prevented. This can result in a pressure build-up that may cause damage to the boiler and household devices such as showers, washing machines etc.

In these cases we recommend that a mini-expansion vessel be fitted adjacent to the boiler in the cold water pipe.

2.11 Operation

Domestic Hot Water: With a demand for hot water the burner will light at its maximum setting and then automatically adjust its output to maintain the temperature of the delivered water. When hot water is no longer required, the burner will extinguish. The fan and pump may continue to run for a short period to dissipate the residual heat from the appliance.

Central Heating: With a demand for heating the burner will light at its minimum setting and gradually increase to give the maximum output. The output of the appliance is then automatically adjusted to maintain the temperature of the system. The output can reduce down to a minimum of 11.9 kW. If the system no longer requires even the minimum output to maintain the desired room temperature the burner will extinguish. The fan and pump may continue to run to dissipate the residual heat from the appliance. The appliance will remain off for a fixed period of three minutes before re-lighting to automatically meet the system requirements.

Domestic Hot Water and Central Heating: The appliance will supply heat to the central heating system as required. A demand for domestic hot water at a tap or shower will override the central heating requirement for the period of the domestic hot water demand. When hot water is no longer required the appliance will return to the central heating state and its normal mode of operation.

Fig. 1. Appliance water flow diagram.

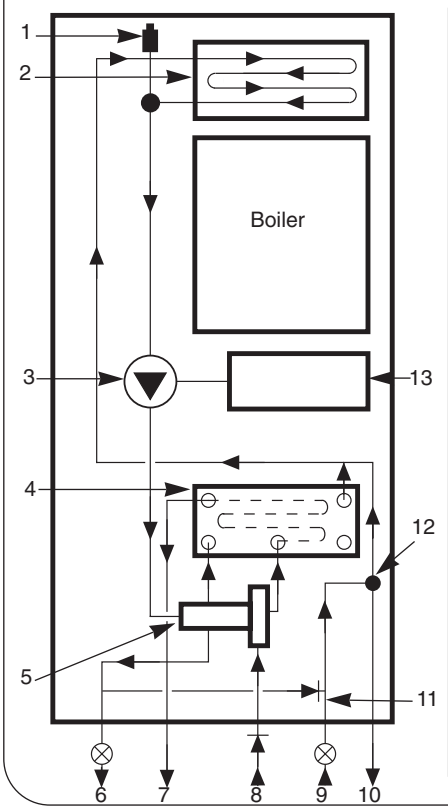

1. Automatic air vent.
2. Gas to water heat exchanger.
3. Circulating pump.
4. Water to water heat exchanger.
5. Water diverting valve.
6. CH flow.
7. DHW out.
8. Mains cold water in.
9. CH return
10. Safety discharge.
11. Central heating by-pass adjustment.
12. Pressure relief valve.
13. Sealed system expansion vessel.

3. Technical Data

Table 1.

	NOMINAL BOILER RATINGS (10 Minutes After Lighting)							
	BOILER ADJUSTED FOR G20 (Natural Gas)							
	OUTPUT		INPUT (Net)		BURNER SETTING PRESSURE		GAS RATE	
	kW	Btu/h	kW	Btu/h	m bar.	in. wg.	m^3/h	ft^3/h
DHW	9.0	30,700	10.4	35,500	2.0	0.8	1.1	37.8
CH	11.9	40,600	13.8	47,100	3.5	1.4	1.46	51.5
MAX	24.0	81,900	27.0	92,100	13.2	5.3	2.9	100.0
	BOILER ADJUSTED FOR G31 (Propane)							
DHW	9.0	30,700	10.4	35,500	5.5	2.2	0.42	14.4
CH	11.9	40,600	13.8	47,100	7.2	2.9	0.58	20.5
MAX	24.0	81,900	27.0	92,100	35.5	14.4	1.13	38.8

Note: Gross Heat Input x 0.901 (NG) or x 0.922 (propane) = Net Heat Input.

Table 2.

FLUE DETAILS		
	mm	**inches**
FLUE ASSEMBLY DIAMETER	125	5

Table 3

PUMP HEAD						
BOILER OUTPUT		HEAD		MIN. FLOW RATE		FLOW/ RETURN DIFFERENTIAL
kW	Btu/h	Metres	Feet	L/min.	Gal/Min.	°C °F
9.0	30,700	4.8	15.7	11.7	2.57	11°C 20°F
24.0	81,900	2.0	6.6	20.5	4.5	12.5°C 22°F

Table 4

MECHANICAL SPECIFICATIONS	
CENTRAL HEATING FLOW - COMPRESSION	22mm
CENTRAL HEATING RETURN - COMPRESSION	22mm
COLD WATER INLET - COMPRESSION	15mm
DOMESTIC HOT WATER FLOW - COMPRESSION	15mm
GAS INLET	Rp ¾
RELIEF VALVE DISCHARGE - COMPRESSION	15mm
CASING HEIGHT	850mm
CASING WIDTH	450mm
CASING DEPTH	360mm
WEIGHT - DRY	45kg
WEIGHT - MAXIMUM INSTALLATION	42kg
WEIGHT - PACKAGED	48kg

Table 5

PERFORMANCE SPECIFICATIONS			
PRIMARY WATER CAPACITY		2.0 litres	
MAXIMUM MAINS INLET PRESSURE		10 bar	
MINIMUM MAINS INLET PRESSURE (working) for max. hot water flow		1.2 bar	
MINIMUM MAINS INLET PRESSURE (working) to operate appliance		0.7 bar	
MAXIMUM CENTRAL HEATING FLOW TEMPERATURE		82°C nom	
MAXIMUM CENTRAL HEATING SYSTEM SET PRESSURE		1.5 bar	
DOMESTIC HOT WATER TEMPERATURE RANGE		50 - 62°C	
OUTPUT TO DOMESTIC HOT WATER	NATURAL GAS (G20)	9.0 - 24 kw	
	LPG - PROPANE (G31)	9.0 - 24 kw	
OUTPUT TO CENTRAL HEATING	NATURAL GAS (G20)	11.9 - 24 kw	
	LPG - PROPANE (G31)	11.9 - 24 kw	
DOMESTIC HOT WATER SPECIFIC RATE AT 30° RISE		12.4 l/min	
MAXIMUM DOMESTIC HOT WATER FLOW RATE FROM APPLIANCE AT 40° RISE		9.0 l/min	
NOx CLASSIFICATION		Class 3	
SEDBUK*		78.1	BAND D

*The value is used in the UK Government Standard Assesment Proceedure (SAP) for the energy rating of dwellings. The test data from which it has been calculated have been certified by the Gastec notified body.

Table 6

DOMESTIC HOT WATER - TEMPERATURE RISE				
DISCHARGE RATE l/min	7	8	9	10
TEMPERATURE RISE °C	49	42.9	38.1	34.3

Table 7

GAS SUPPLY SYSTEM - BASED ON NG (G20)			
TOTAL LENGTH OF GAS SUPPLY PIPE meters			
3	6	9	
GAS DISCHARGE RATE m3/h			PIPE DIAMETER mm
8.7	5.8	4.6	22
18.0	12.0	9.4	28

Table 8

CLEARANCES (mm)		
	INSTALLATION	SERVICE
ABOVE APPLIANCE	300	300
IN FRONT OF APPLIANCE	600	600
BENEATH APPLIANCE *	900	200
RIGHT AND LEFT HAND SIDE	10	10

***Refer to Section 4.6**

Table 9

SYSTEM CAPACITY WITH A 10 LITRE VESSEL			
TOTAL SYSTEM VOLUME litres			
INITIAL PRESSURE bar	INITIAL CHARGE PRESSURE bar		
	0.5	1.0	1.5
1.0	72	92	n/a
1.5	39	53	64

4. Siting The Appliance

4.1 The appliance must not be installed in any room containing a bath or shower or in a bedroom or bed-sitting room.

Particular attention is drawn to the requirements of the current I.E.E. Wiring Regulations and, in Scotland, the electrical provisions of the Building Regulations applicable in Scotland.

4.2 The appliance is not suitable for external installation.

4.3 The appliance does not require any special wall protection.

4.4 The wall must be capable of supporting the weight of the appliance. See Table 4.

4.5 The following clearances must be available for installation and for servicing. See Fig. 2.

4.6* The appliance should have a minimum clearance of 900mm between the bottom of the appliance and the floor.

4.7 The appliance can be installed in a cupboard used for airing clothes provided that the requirements of BS 6798 and BS 5440:2 are strictly followed.

4.8 No combustible surface must be within 75mm of the casing. See BS476:4.

4.9 An airing space must be separated from the boiler space by a perforated non-combustible partition. Expanded metal or rigid wire mesh are acceptable provided that the major dimension is less than 13mm. See BS 6798:1987.

4.10 The distance between the inner face of a cupboard door and the cabinet front should not be less than 75mm.

4.11 The pipe connection positions on the manifold are shown in Fig 3 allowing the system to be pre-piped and flushed before the appliance is fitted. Always consider the possible need to disconnect the pipes from the appliance after installation.

Fig. 2. Appliance casing dimensions and required clearances.

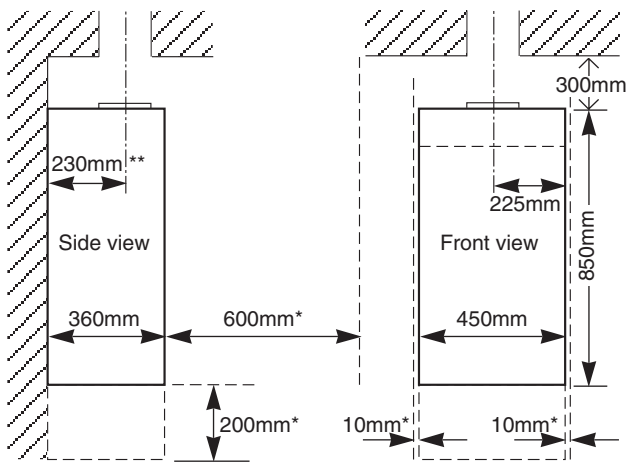

* Space required for installation and servicing
** 260mm if a wall spacer is fitted
Note: Minimum clearance to the floor should be 900mm.

4.12 LPG Installation: The appliance shall not be installed in a room or internal space below ground level when it is intended for use with LPG. This does not preclude the installation into rooms which are basements with respect to one side of the building but open to ground level on the opposite side.

Fig. 3. Appliance pipework connections

Screw driver required to operate Valves.
Valves shown closed.

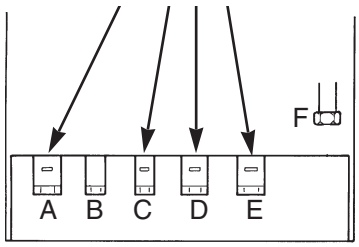

View on underside of appliance showing connections

A	CH Flow	=	62.5
B	DHW Out	=	127.5
C	Mains Cold Water In	=	192.5
D	Gas Inlet	=	257.5
E	CH Return	=	322.5
F	Safety Relief	=	382.5

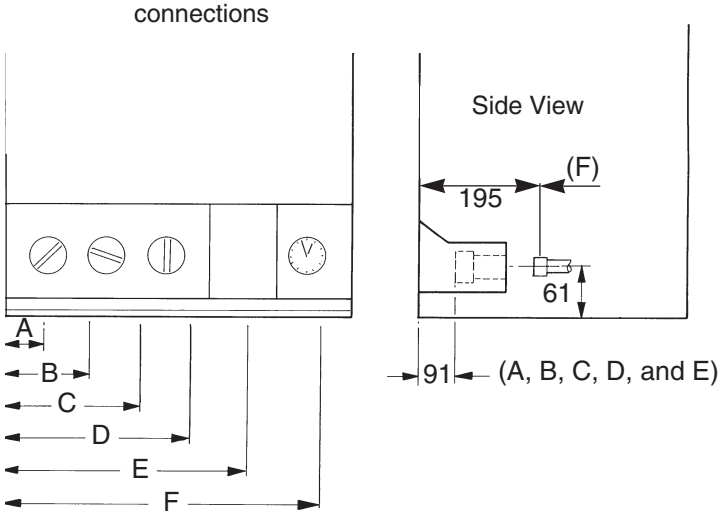

5. Siting The Flue Terminal

5.1 The flue diameter is 125mm. Refer to BS 4543.
5.2 The flue must be installed as specified in BS 5440:Part 1.
5.3 A means of disconnection of the flue should be provided and positioned immediately above the appliance draught diverter.
5.4 Horizontal flue runs should be avoided and the flue should terminate in accordance with the requirements of BS 5440:1. The terminal must be of a type approved by British Gas.
5.5 If the flue is to be taken through the wall behind the appliance then adequate space must be available to allow the fitting of a suitable flue bend.
5.6 A right-angle bend is not acceptable.
5.7 A minimum of 600mm of vertical flue pipe is required before the introduction of a bend. If the flue is taken through the ceiling and into the roof space or room above then a sleeve of non-combustible material allowing an air space of at least 25mm between the flue and the sleeve must be provided. The flue pipe must be held in the centre of the sleeve.

6. Air Supply

6.1 The room in which an appliance is installed must have a permanent air vent to outside air or to a room which itself has direct access to outside air. The minimum effective area of the air vent(s) must be 104cm^2.
6.2 Installations in cupboards or compartments require permanent vents for cooling purposes, one at high level and one at low level, either direct to outside air or to a room. Both vents must pass to the same room or be on the same wall to outside air.
6.3 Refer to BS 6798 and BS 5440:2 for additional information.
6.4 There must be sufficient clearance around the appliance to allow proper circulation of ventilation air. The clearances required for Installation and Servicing will normally be adequate for ventilation. See Section 4.6.
6.5 The minimum free areas required are given below.

POSITION OF AIR VENTS	AIR FROM THE ROOM	AIR DIRECT FROM OUTSIDE
HIGH LEVEL	270 cm^2	135 cm^2
LOW LEVEL	540 cm^2	270 cm^2

6.6 Refer to BS 6798 and BS 5440:2 for additional information.
6.7 A spillage test, as detailed in BS 5440:1, must be carried out and any remedial action taken to ensure that the installation meets the standard. The effect of any type of extract fan in the premises must be considered and an additional air inlet may be needed from outside to counter the effect of the fan.
6.8 A compartment containing an open-flued appliance shall be labelled as follows:

"IMPORTANT: Do not block the vents.
Do not use the
compartment for storage."

Note: In an airing cupboard situation the section containing the appliance is the compartment.

7. Sealed Primary Systems

See Figs. 4, 5 and 5a

7.1 The system must comply with the requirements of BS 6798 and BS 5449.

7.2 The appliance must not be operated without the system being full of water, properly vented and pressurised.

7.3 The pressure relief valve operates at 3 bar (45lb/in^2). The discharge must be directed away from electrical components or where it might be a hazard to the user.

7.4 The pressure gauge indicates the system pressure which must be maintained.

7.5 The 10 litre expansion vessel is charged to 0.5 bar and is suitable for a static head of 5 metres (17.5ft). The pressure can be increased if the static head is greater than 5 metres (17.5ft).

7.6 With an initial system pressure of 0.5 bar, a system capacity of about 72 litres can be accommodated. Refer to BS 7074 for more information. The charge pressure can be increased but with a decrease in system volume.

7.7 The appliance includes a system filling link.

7.8 Water loss must be replaced.

7.9 Repeated venting loses water from the system. It is essential that this water is replaced and the system pressure maintained. Refer to Section 13 Commissioning.

7.10 Connections to the mains water supply must not be made without the authority of the local Water Company.

7.11 The pump is set at maximum and must not be adjusted.

7.12 Connections in the system must resist a pressure of upto 3bar.

7.13 Radiator valves must conform to BS2767:10.

7.14 Other valves used should conform to the requirements of BS1010.

7.15 No special system inhibitor is needed.

8. Gas Supply

8.1 The appliance requires 2.9 m^3/h of natural gas (G20) or 1.13 m^3/h of propane (G31). Check that the supply system can accommodate this together with any other appliances connected to it. Refer to Table 7.

8.2 A natural gas appliance must be connected to a governed meter.

8.3 There must be a pressure of 20mbar (G20) or 37mbar (G31) at the inlet to the appliance. This is equivalent to a pressure of 18.5 - 19.0mbar (G20) or 35 - 35.5mbar (G31) at the inlet pressure tapping on the gas valve.

Fig. 4. Sealed primary water system.

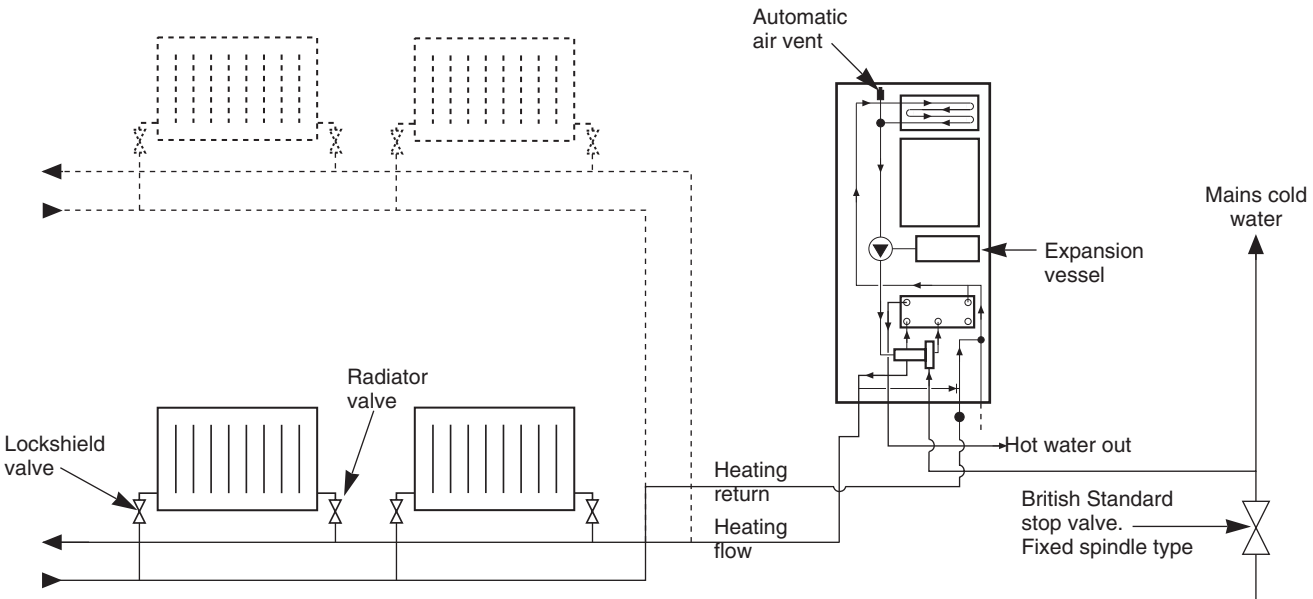

NOTE: A drain cock should be installed at the lowest point of the heating circuit and beneath the appliance.

Fig. 5. Filling Loop.

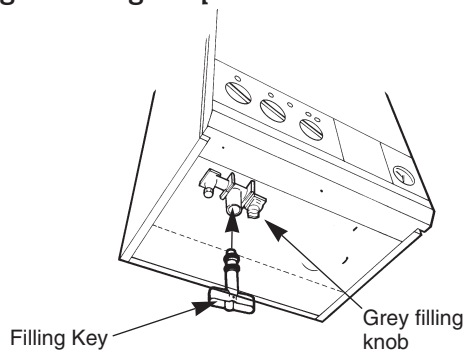

Fig. 5a. Filling Key inserted for filling.

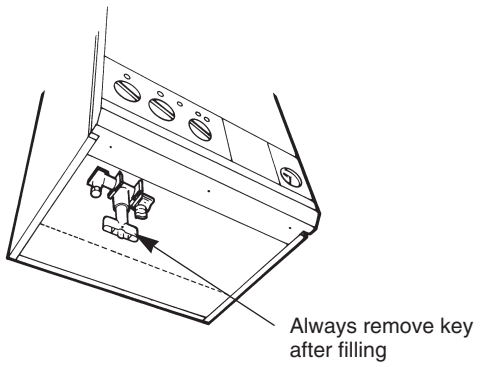

9. Open Vent Primary Systems

9.1 The size of the flow and return pipework is given in Section 3 – Table 4. The components required to connect the appliance to an open vent system are available as an optional extra kit.

9.2 The feed and expansion cistern should be arranged so that there is a minimum static head of 0.3 metres (12 inches) above the top of the appliance or above the highest point in the heating circuit, whichever is the higher. See Fig. 6

9.3 The feed and vent pipe should be 22mm diameter and rise continuously from the appliance to the feed and expansion cistern.

9.4 A pressure relief valve is not required on an open vented system.

9.5 Air within the appliance will be expelled via the feed and vent connection or dissipated into the rest of the system which must be fitted with manual air vents at any high point.

9.6 The pump is set to maximum and must not be reset.

9.7 If it is required to use the appliance for domestic hot water before the central heating circuit is connected, a 22mm copper by-pass must be connected between the central heating flow and return. Refer to Section 12.

Fig. 6. Open vent water system.

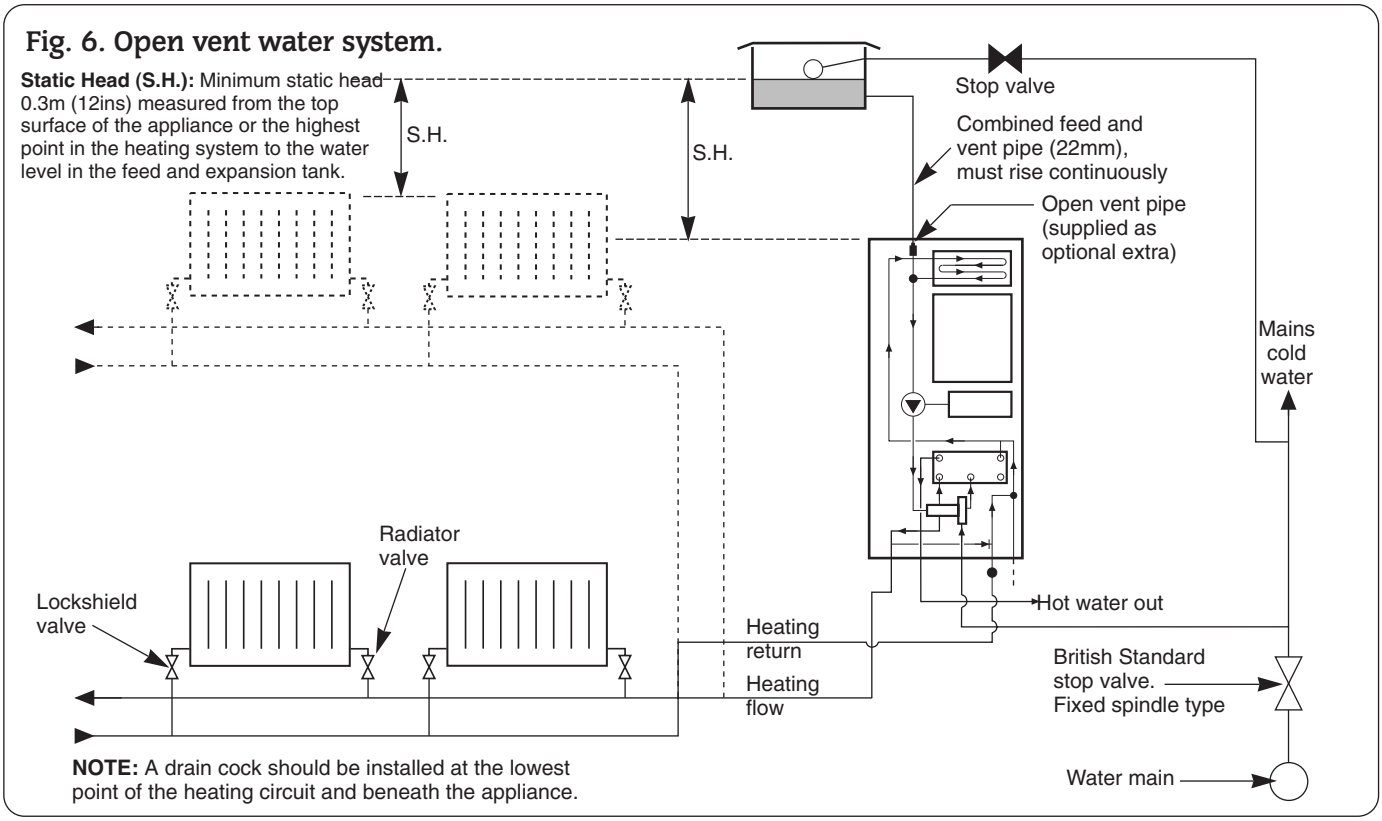

10. Domestic Hot Water

10.1 The following are general requirements and, if necessary, reference should be made to the local Water Company before fitting the appliance.

10.2 MAINS COLD WATER INLET. Devices capable of preventing the flow of expansion water must not be fitted unless separate arrangements have been made. An expansion vessel connection point is provided within the appliance. An Rc1/2 connection is provided. A mini expansion vessel kit is available from Worcester Heat Systems Ltd. A thread sealant compatible with potable water must be used.

10.3 The final 600mm of the mains cold water connection to the appliance should be made in copper tube only.

10.4 The appliance is suitable for a mains pressure of up to 10 bar (150 lb/in^2).

10.5 The appliance is fitted with a mains supply isolating valve.

10.6 The maximum domestic hot water flow rate is 9.0 litres/min (±15%) (2.0 gallons/min).

10.7 In winter (when the mains inlet water temperature is lower) a reduced flow rate at the taps may be required to achieve the hot water delivery temperature available in warmer weather.

10.8 It is suggested that long pipe runs to the taps or shower should be insulated to prevent the rapid cooling of domestic hot water after a tap or shower has been turned off.

10.9 Hot and cold taps and mixing valves used with this appliance must be suitable for operating at mains pressure and temperatures of 65°C.

10.10 No anti-syphonage arrangements are necessary except for some loose head showers. See also Section 10.12.

10.11 Thermostatically controlled or pressure equalising shower valves will guard against the flow of water at too high a temperature.

10.12 The head of a loose head shower must not fall closer than 25mm (1in) above the top edge of the bath to prevent its immersion in bath water. Alternatively the shower must be fitted with an anti-syphonage device at the point of the flexible hose connections.

10.13 The supply of hot and cold mains water direct to a bidet is permitted, subject to local Water Company requirements, provided that the bidet is of the over-rim flushing type. The outlet(s) should be shrouded and unable to have any temporary hand held spray attached. No anti-syphonage arrangements are necessary.

10.14 As the maximum temperature of the Water to Water heat exchanger is limited by the control circuit, there is normally no need for water treatment to prevent scale accumulation. In exceptional circumstances a device to prevent scale formation can be fitted.

Installation of a scale inhibitor assembly should be in accordance with the requirements of the local Water Company. An isolating valve should be fitted to allow servicing. The water hardness can be determined using a standard test paper or by reference to the local Water Company.

11. Electrical

11.1. Mains supply : 230V ~ 50Hz, 140 watts. External fuse 3A, Internal fuses F1 - 2A, F2 - 1.25A (20mm). Spare internal fuses are supplied with the appliance. Refer to Fig 13.

11.2. The appliance must be earthed. It must be possible to completely isolate the appliance.

11.3. The mains cable must be 0.75mm2 (24x0.20 mm) to BS6500-Table 15 or 16.

11.4 The mains cable must be connected to the terminal ST12 marked L (red or brown lead), N (black or blue lead) and the Earth stud (green or green/yellow lead) and secured with the cable clamp. Check that sufficient loose lead has been left to allow access to the control box. The Earth lead must be still be slack when the other leads are taut. Refer to Fig 7.

11.5. The connection to the mains must be either: A 3A fused three-pin plug and unswitched socket outlet, both complying with BS1363 or a double pole isolator with a contact separation of 3mm in all poles and supplying the appliance and controls only.

11.6. Access to the mains connection on the driver board is gained by removing the bottom cover from the facia. Refer to Fig 11.

11.7. A room thermostat or an externally mounted programmer must be suitable for mains voltage operation and the leads securely fixed in the clamps provided. The controls must be earthed at the connection on the control board. Refer to Fig 10 and 12.

11.8. A programmer, to fit into the facia, is available to control the CH. Full instructions are sent with the programmer.
Refer to Fig 14.

11.9. A clock, to fit into the facia, is available to control the operation of the central heating.

11.10. On very rare occasions an external frost thermostat might be considered where parts of the system are remote from the appliance. Refer to Worcester Heat Systems Technical Department for more information - Tel: 0990 266241.

11.11. A radio frequency room thermostat is available for use with the appliance.

11.12. **Safety Check**: If there is an electrical fault after installation check for fuse failure, short circuits, incorrect polarity of connections, earth continuity or resistance to earth.

Fig. 7. Mains electricity connections.

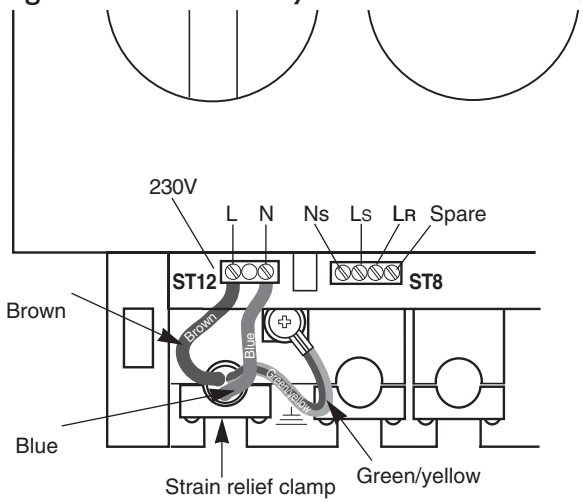

Fig. 8. Wiring diagram.

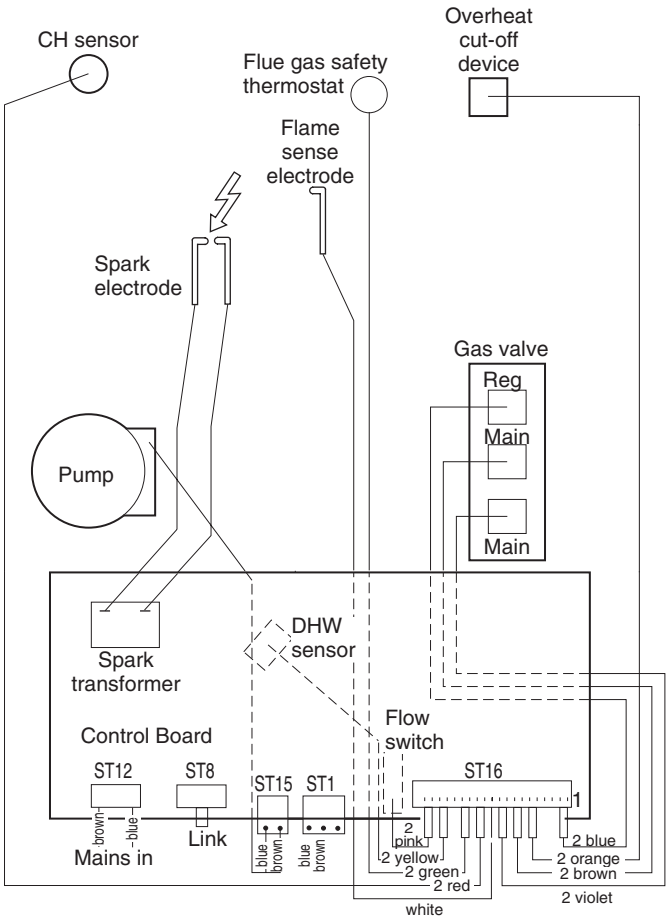

Fig. 9. Functional flow diagram.

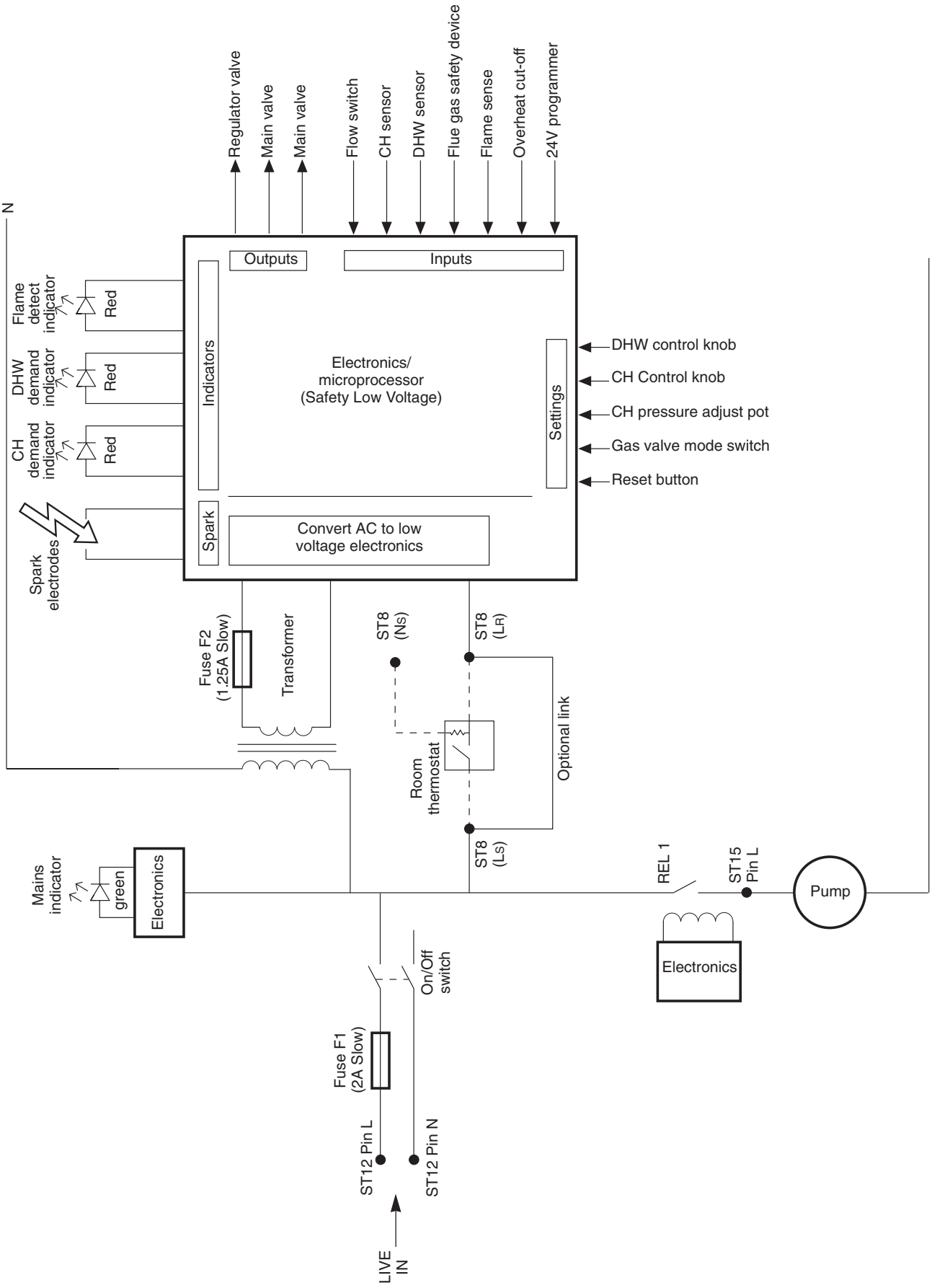

Fig 10 - Electrical Connections

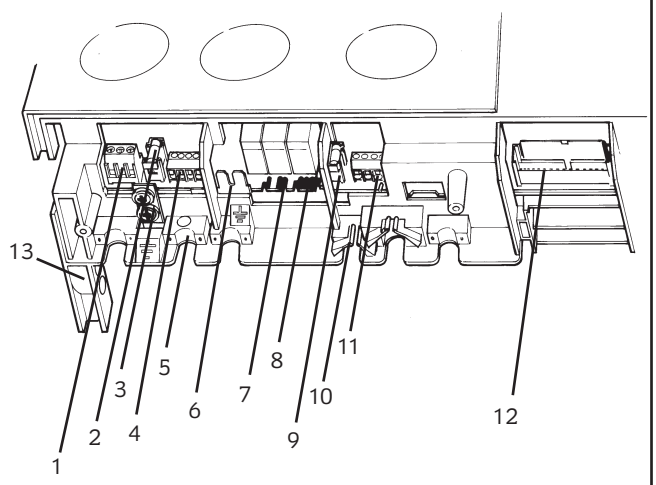

1. ST12-Mains
2. Fuse-F1
3. Earth Screw
4. ST8-Room Thermostat and External Control -Mains Voltage
5. Cable Entry Screw Clamp
6. Earth Tag
7. ST15-Pump
8. ST1-Fan
9. Fuse-F2
10. Cable Entry Clamp
11. ST13-24volt Controls
12. Main Harness and Clamp
13. Control Panel Pivot Point

Fig 11 - Facia Connections Cover

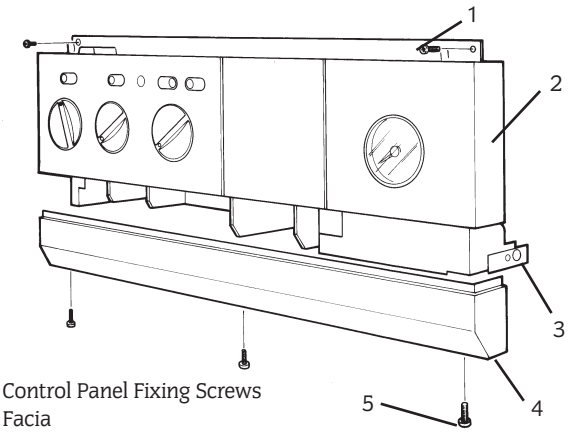

1. Control Panel Fixing Screws
2. Facia
3. Control Panel Pivot Point
4. Connection Cover
5. Connection Cover Fixing Screws

Fig 12 - Mains Voltage External Controls Connections

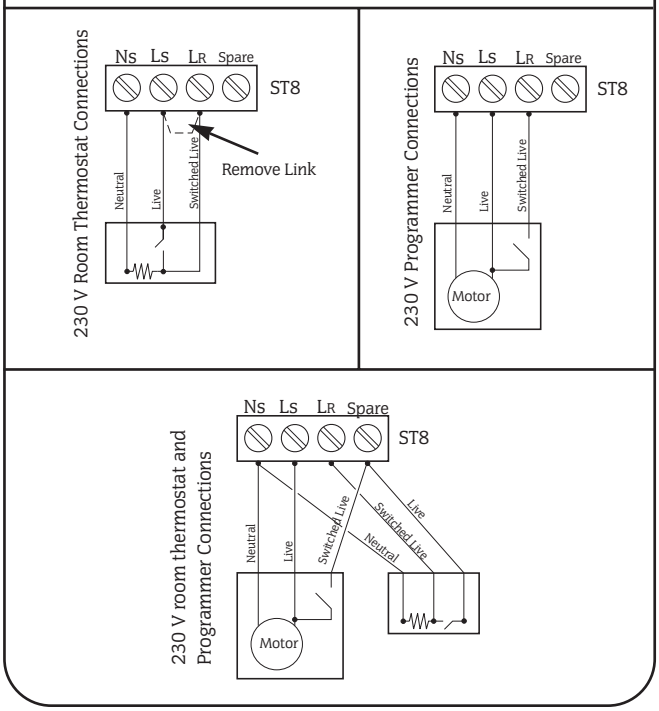

Fig 13 - Replacement Fuses

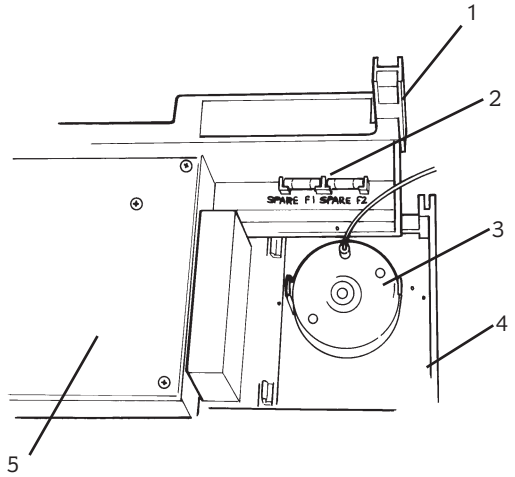

1. Control Panel Pivot Point
2. Fuses-F1,F2
3. Pressure Gauge
4. Facia Panel
5. Control Board Assembly

Fig 14 - Programmer Connection

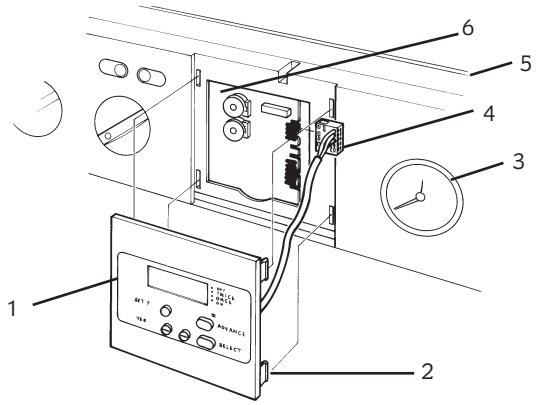

1. Programmer
2. Programmer Fixing Clip
3. Pressure Gauge
4. Programmer Connector
5. Facia
6. Control Board

12. Installation

Read this section fully before starting the Installation.

12.1 General.

The appliance is supplied suitable for fitting to a sealed system. If it is to be fitted to an open vent system refer to Section 8.

The flue must be installed in accordance with BS5440:1

12.2 Unpacking and Appliance Preparation.

Remove packaging from the appliance leaving it to stand upright on the polystyrene plinth.

Using the two M4 thread-forming screws supplied in the hardware pack assemble the wall-plate cross members to the pre-plumbed manifold. Refer to Fig 15.

12.3 Site Preparation

Check that the wall is sound, flat and will support the weight of the appliance. Refer to Table 4.

Check that the position chosen for the appliance is in accordance with the instructions given in Section 4 and 5.

Ensure that the plastic cover over the valves and 'O' rings is left in place. The cover will protect the valves and 'O' rings against the ingress of dirt and dust.

12.4 Fixing Holes and Flue Opening

Hold the wall-plate to the wall. Check that the plumbing manifold is level.

Mark the position of the fixing holes. Two at the top and two on the plumbing manifold.

Mark the position of the appliance centre-line from the 'V' formed by the wall-plate cross-member. Refer to Fig 15.

Mark a horizontal line across the top of the plumbing manifold.

12.5 Wall-mounting Plate and Manifold

Fit the plugs and fix the plate/manifold assembly to the wall.

Check that the assembly is properly aligned before tightening the screws.

Prepare the opening in the ceiling for the flue pipe. Refer to Fig. 2,15.

If the pipes are to pass up the rear of the appliance then a wall spacer 30mm deep (optional extra) must be used with the corresponding adjustment in the position of the opening in the ceiling.

12.6 Gas and Water Pipes

Remove and discard the plastic cover protecting the valves and 'O' rings. Check that the 'O' rings are fitted and that they are clean and lubricated.

Remove the gas cock, fix the appropriate fitting to connect to the inlet pipe and replace.

Connect the water connections to the manifold. Refer to Fig 3.

Pre-plumbing is not advised if no movement in the pipework is not available.

Pipework can only run horizontally outside the limits of the casing. It is important that the pipes are not fixed near the appliance using clips that put a strain on the connections.

Before the appliance is fitted to the wall the primary system and the mains supply must be thoroughly flushed and treated in accordance with the recommendations of BS7593:1992.

12.7 Install the Boiler

Slide the appliance onto the pre-plumbing manifold ensuring that the three pegs are located correctly.

Secure with two M6 nuts and washers at the top and screw the appliance to the manifold at the bottom using the three retaining caps and M6 bolts. Refer to Fig 16.

Fig. 15. Fixing the wall mounting plate.

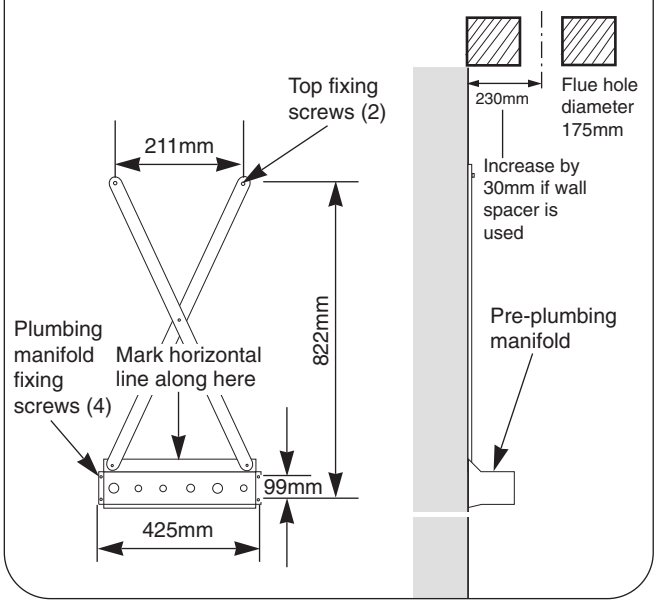

Fig. 16. Fixing the appliance to the wall mounting plate.

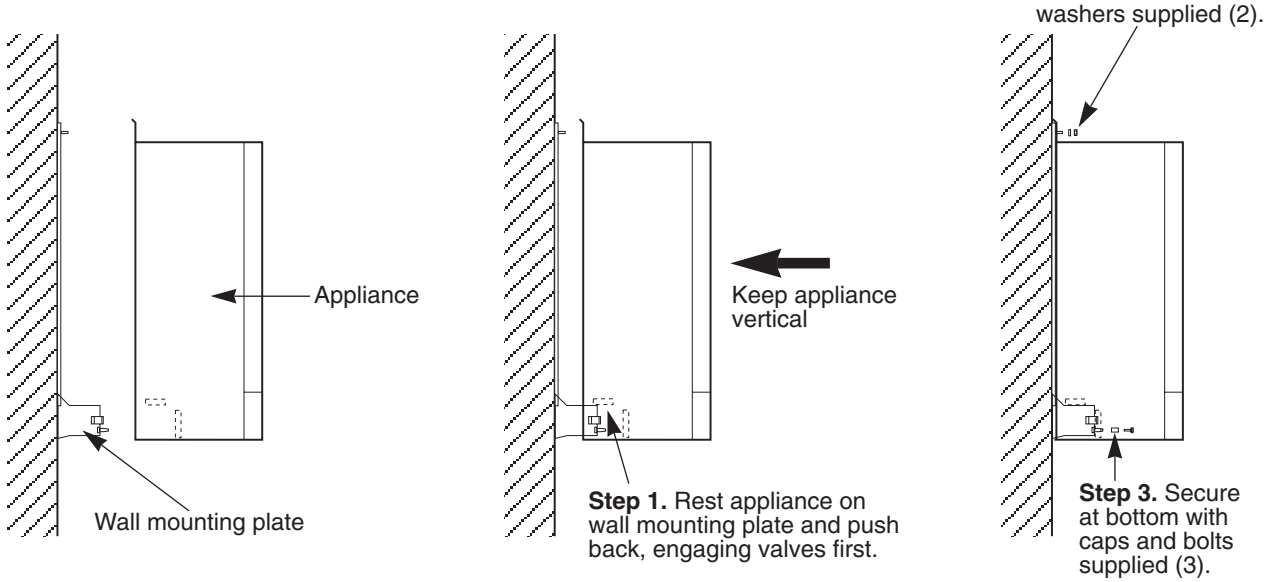

Access to these pegs and caps can be made easier by removing the bottom panel. Refer to Section 15.3, d.

Unscrew and discard the automatic air vent cap. Refer to Fig.17.

Connect the flue pipe to the appliance and seal the gap between the pipe and the spigot. The flue must be supported so that its weight is not put upon the appliance. Connect and make good the flue system and terminal as specified in BS 5440:1

12.8 FINAL INSTALLATION

Check that all the water and gas connections have been tightened.

If a facia mounted programmer is to be fitted follow instructions with the programmer..

Hinge down the facia as described in Section 15.3, c.

Connect the mains electrical supply to the appliance at terminal ST 12 See Fig. 7. Connect any room and/or frost thermostats. The electrical leads must pass through the appropriate space in the control panel and be fixed with the cable clamps provided. See Fig. 10. Refit the facia panel.

Test the gas supply pipework up to the appliance for soundness as indicated in BS 6891.

Refer to Section 13.2 for a full description of the filling, venting and the pressurising of the system.

If the appliance is not to be commissioned immediately, replace the cabinet front panel. Check that the gas supply, the electrical supply and the water connections are all turned off.

If the premises are to be left unoccupied during frosty conditions, then drain the appliance and system. For short inoperative periods, leave the appliance under the control of the built in frost thermostat or the remote frost thermostat (if fitted) or leave operating continuously with the room thermostat set at 6°C.

13. Commissioning

13.1 SUMMARY

The appliance is dispatched with the controls set to provide a maximum output for domestic hot water and central heating of 24 kW (81,900 Btu/h).

The appliance automatically modulates to satisfy lower heat loads.

Domestic Hot Water Circuit

Confirm that the mains water supply has been flushed out at installation. If not it will be necessary to disconnect the cold water inlet pipe from the appliance and thoroughly flush.

Central Heating System

Confirm that the system has been fully flushed out at installation using a flushing agent. Flush the system before starting to commission the appliance and, at the end of the commissioning procedure, add a suitable flushing agent and drain whilst hot. Immediately refill and re-pressurise.

Gas Service. The complete system, including the meter, must be inspected and tested for soundness and purged as indicated in BS 6891. In the event of a leak, or suspected leak, at the 'O' ring joint on the main appliance manifold, connect a manometer to the test point on the inlet of the multifunctional gas valve. A soundness test carried out after turning off the appliance gas cock will test the section between the gas cock and the gas valve, thus enabling the leak to be traced to either a visible joint or to the 'O' ring.

13.2 APPLIANCE AND CENTRAL HEATING SYSTEM – PREPARATION

Remove the cabinet front panel.

Check that the electrical supply and the gas service to the appliance are off. Refer to Fig. 3.

Check that all the water connections throughout the system are tight.

Open the system valves at the appliance. Open all the radiator valves, fill the system and vent each radiator in turn.

Remove the bottom panel to gain access to the filling loop assembly. (The grey knob for the filling loop is packed in the hardware pack and should be fitted as shown in Fig. 5,5a.

Insert the bayonet end of the filling key into the corresponding cutouts in the filling loop housing and twist to lock the key in place.

Turn the grey knob anti-clockwise to allow water ingress and fill until the pressure gauge reads 2.5 bar.

Turn the grey knob clockwise to stop filling and remove the filling key by lining up the bayonet end of the key with the cutouts in the filling loop housing and withdrawing the key.

N.B. The key must always be removed from the filling loop housing after the system has been filled to prevent accidental filling and to comply with Byelaw 14 of the Water Byelaws Scheme.

Store the key in a safe place for future use and refit the bottom panel.

The automatic air vent will vent the appliance. Check that the air vent cap has been loosened. See Fig. 17.

Check that the pressure relief valve operates by turning the knob anti-clockwise until it releases. Water should be expelled from the discharge pipe. See Fig. 18.

Lower the facia panel to gain access. Refer to Fig. 17.

Fig. 16. Appliance casing and control equipment fixings.

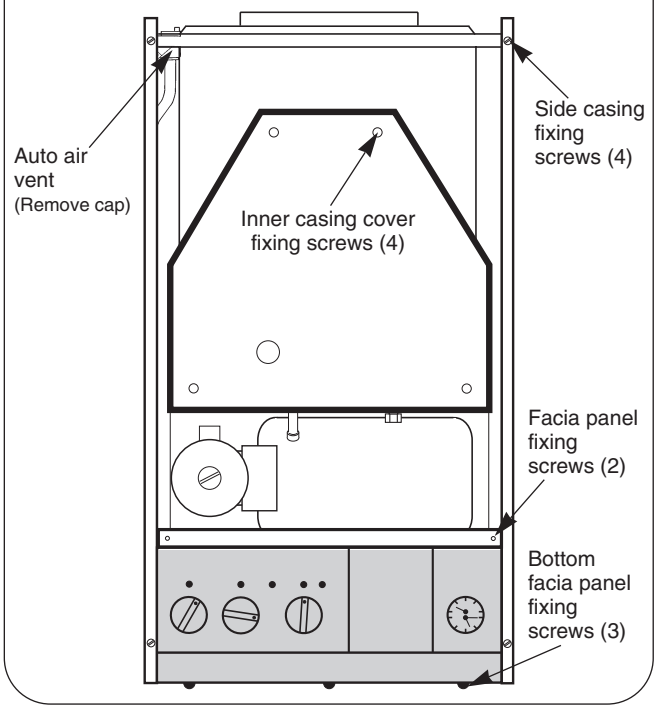

Set the Expansion Vessel Pressure

The charge pressure of the expansion vessel as dispatched is 0.5 bar, which is equivalent to a static head of 5 metres (17 ft). The charge pressure must not be less than the static head at the point of connection. See Fig. 6. A Schraeder type tyre valve is fitted to the expansion vessel to allow the charge pressure to be increased if necessary.

Set the system pressure

Release water from the system using the relief valve test knob (see Fig. 18), until the system design pressure is obtained, up to a maximum of 1.5 bar.

Initial system design pressure (bar) = Expansion vessel charge pressure + 0.3 bar.

NOTE: 1 bar is equivalent to 10.2 metres (33.5ft) of water.

Set the movable pointer on the pressure gauge to coincide with the indicating pointer giving a permanent record of the set system pressure.

If the pressure indicated on the pressure gauge is greater than 2.6 bar when operating at the maximum central heating temperature, an extra expansion vessel must be fitted to the system as close as possible to the appliance central heating return connection.

The appliance (as dispatched) can accommodate a system volume of about 83 litres. Refer to BS 7074 Part 1. If the system volume is in excess of that accommodated by the expansion vessel fitted to the appliance then an extra expansion vessel must be fitted as close as possible to the central heating return connection of the appliance.

Any extra vessel fitted must be pressurised to the same figure as the integral vessel. If the expansion vessel fails then the specified replacement must be fitted.

13.3 PROGRAMMER

Any programmer fitted on the appliance should be set up at this stage following the instructions sent with the programmer.

The programmer will retain the setting for up to three weeks following an interruption in the electricity supply.

13.4 APPLIANCE OPERATION

Turn off the gas and electricity supplies to the appliance.

Loosen the burner pressure test point screw on the gas valve and connect a pressure gauge. See Fig. 20.

Undo the two screws and hinge down the facia to gain access to the mode switch. Refer to Fig. 17.

Domestic Hot Water

Set the gas valve mode switch, at the rear of the facia, to the maximum position.

Turn on the gas and electricity supplies.

Set the CH temperature control knob fully anti-clockwise to

and the DHW temperature to MAX.

Open a hot water tap.

A continuous ignition spark will occur until the burner is alight and sensed by the control circuit. The burner pressure should be 13.2mbar for natural gas and 35.5mbar for propane. If the burner pressure cannot be achieved then check that the inlet pressure at the appliance is 20mbar for natural gas and 37mbar for propane. This is equivalent to a 18.5-19.0 mbar (G20) or 36 mbar (G31) at the gas valve.

Set the gas valve mode switch to the minimum position.

The burner pressure will drop to the minimum setting which should be 2mbar for natural gas or 5.5mbar for propane.

Test for gas soundness at the joint between the burner and the gas valve with leak detection fluid.

NOTE: The burner pressure is factory set and if (after checking that the supply pressure is sufficient) the correct pressure is not obtained then Worcester Heat Systems Service Department should be contacted.

Fig. 18. Pressure relief valve.

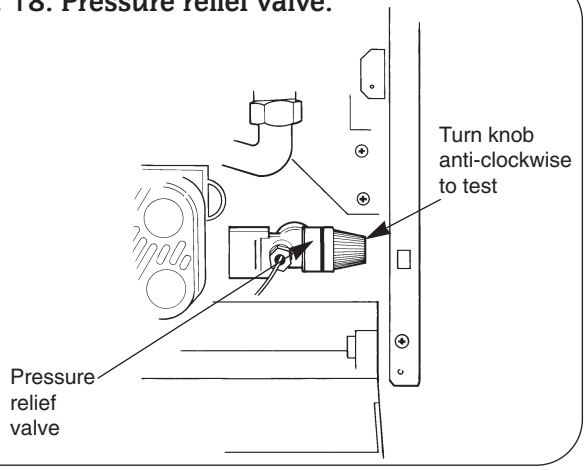

Fig. 19. Central heating by-pass adjustment.

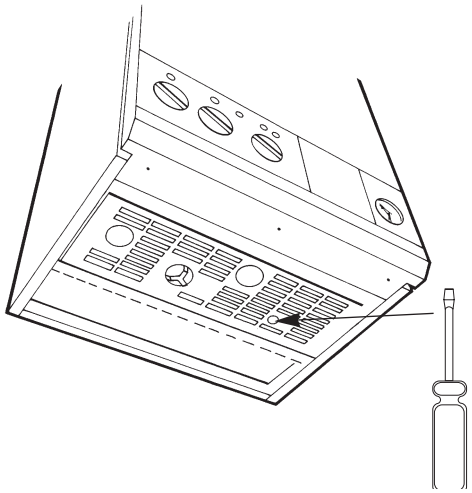

Fig. 20. Gas Valve

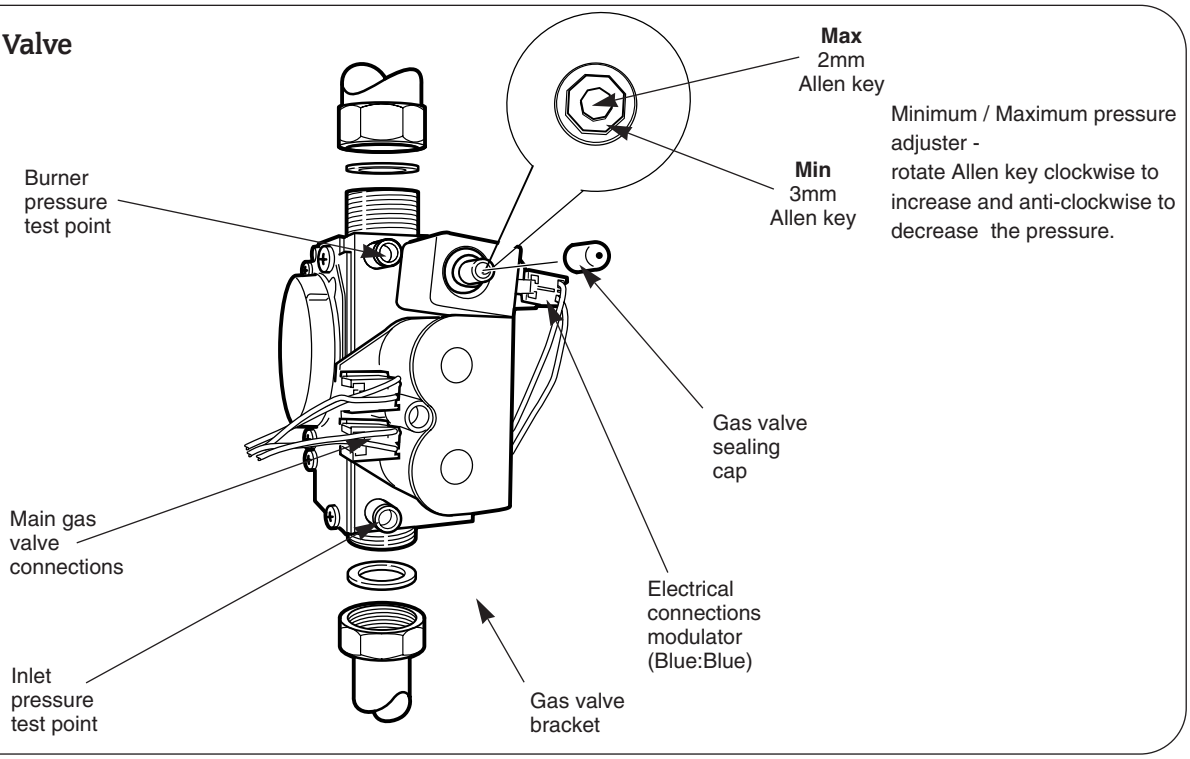

If the appliance does not light, check that it is not in the 'lockout' state by pressing the lockout reset button. See Fig. 21.

Set the gas valve mode switch back to the normal position and refit the facia.

Turn off the electricity supply, and then back on again to reset the controls.

Gradually close the hot tap and check that the burner pressure drops. Fully open the tap and check that the burner pressure rises. Fully close the tap and check that the burner goes off. The fan may continue running until the appliance has cooled to a preset temperature.

Set the Operating Switch to OFF.

Central Heating

Check that all the radiator valves are open. Set the room thermostat and the Central Heating Temperature Control to maximum. Set the DHW temperature control to MIN.

On sealed systems check that the system is pressurised and set to the required pressure as indicated on the gauge.

Set the Programmer, if fitted, to HEATING & WATER.

Set the operating switch to ON.

The burner will light.

The appliance will modulate its output from 11.9 to 24.0 kW over a period of about two minutes.

Check the system to ensure that all the radiators are heating up evenly. If not then bleed each radiator through its vent screw.

Shut down all but one of the radiators and observe the burner pressure fall. Open all of the radiator valves and check that the burner pressure rises.

Balance the system so that the required temperature difference across the central heating flow and return pipes is obtained. See Table 3.

Adjust the central heating by-pass valve until the same temperature difference is obtained. See Fig. 19. This should be carried out with only a single radiator operating. If thermostatic radiator valves are fitted then one radiator should be left uncontrolled. The bypass valve should never be fully closed.

Set the room thermostat to minimum and check that the burner goes out. Reset the room thermostat to maximum and the burner will re-light and follow the normal operating procedure.

Check for proper ignition of the burner after a break in the gas supply. Turn off the gas service cock and wait for 60 seconds. The burner will go out but sparking from the electrode will continue for 10 seconds when the appliance will enter a 'lockout' state. Carefully open the gas service cock, press the lockout reset button and observe the burner re-light and follow the normal sequence of operation. Refer to Fig.21.

Set the Operating Switch to OFF.

Turn off the gas service cock and the electrical supply to the appliance.

Drain the system while the appliance is still hot.

Refill, vent and, with a sealed system, re-pressurise as described in Section 13.2.

Domestic Hot Water and Central Heating

Turn on the electricity supply to the appliance and open the gas supply cock at the appliance.

Set the Operating Switch to ON. If a programmer is fitted, set the domestic hot water to Continuous or 24Hrs and the central heating to ON. The burner will light and heat will pass into the system. Set the DHW temperature to MAX and turn on a hot water tap and check that fully heated hot water is discharged from the tap.

Close the tap and the burner will go off. The appliance will then return to the central heating mode and automatically balance with the system requirements.

Set the Operating Switch to OFF and the burner will go out.

12.5 COMPLETION OF COMMISSIONING

Disconnect the pressure gauge from the gas valve and tighten the test point screw.

Restart the appliance and check for gas soundness around the test point screw.

Refit the cabinet front panel.

If the appliance is being passed over to the user immediately, refer to Section 14 - Instructions to the User.

If the appliance is to be left inoperative, check that the Operating Switch is set to OFF. Turn off the gas service cock.

For short inoperative periods, leave the appliance under the control of the built in frost thermostat or the remote frost thermostat (if fitted) or leave operating continuously with the room thermostat set at 6°C

Do not switch off the electricity supply.

If there is any possibility of the appliance and the system being left totally unused in freezing conditions then switch off the gas and electricity and drain the appliance and the system.

14. Instructions To The User

Fig. 21. User controls.

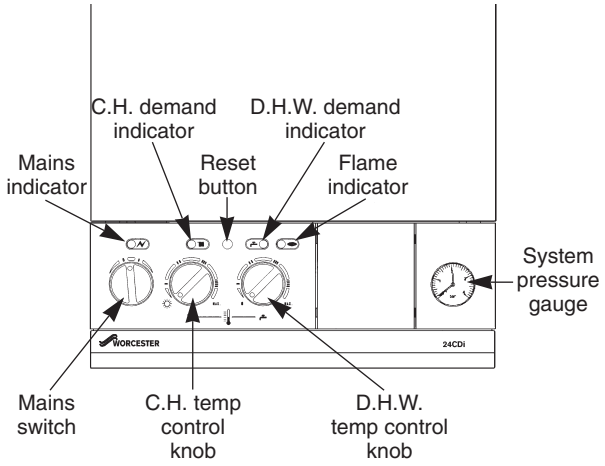

14.1 Tell the user how to operate the appliance and hand over the Users Instructions leaflet.

14.2 Tell the user what to do if the heating system is not to be used in frosty or freezing weather.

14.3 Tell the user the sealed system set pressure.

14.4 Tell the user of the importance of regular servicing. Worcester Heat Systems Ltd. offer a comprehensive maintenance contract.

14.5 Set the system controls to the user's requirements.

14.6 If an external programmer has been fitted which has a programmable domestic hot water facility then it is suggested that this be set to Continuous or the equivalent

14.7 Tell the user about the safety devices and hazard notices.

Fig. 22. Appliance components and fixings (upper assembly).

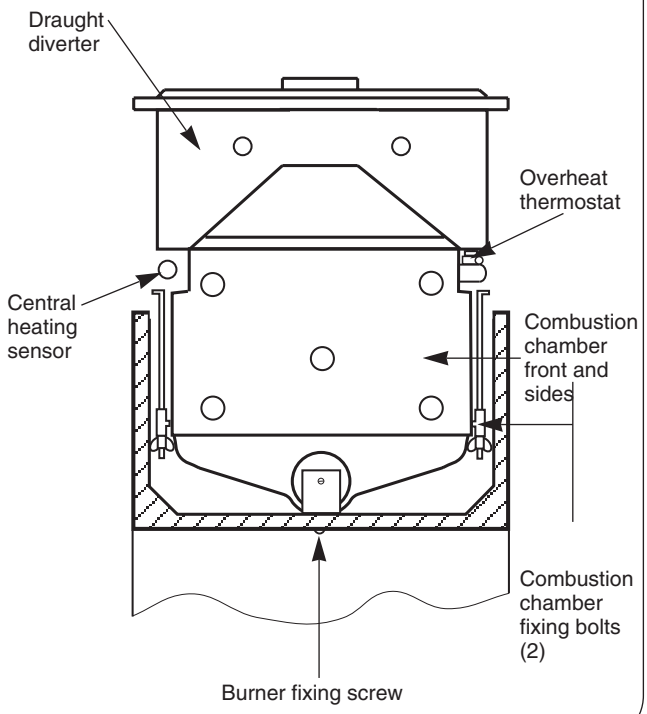

15. Inspection And Servicing

15.1 SERVICING

To ensure continued efficient operation of the appliance it must be checked and serviced as necessary at regular intervals. The frequency of servicing will depend upon the particular installation conditions and usage, but once per year should generally be adequate. The extent of the service required by the appliance is determined by the operating condition of the appliance when tested by fully qualified engineers.

Any service work must be carried out by competent engineers such as British Gas or Corgi registered personnel.

15. 2 PRE-SERVICE INSPECTION

Check that the flue terminal and the terminal guard, (if fitted), are clear.

If the appliance is in a compartment, check that the ventilation openings in the compartment door or walls are clear. See Section 6 - Air Supply.

Check the system and remake any joints or fittings which show signs of leakage. Refill, vent and re-pressurise as described in Section 13.2.

Operate the appliance and the system taking note of any faults.

Measurement of the Flue Gases

For consistency of results of the flue gas measurements it is necessary to have a constant output and stationary equilibrium.

Switch on the appliance.

Switch to DHW and CH mode.

Hinge down the facia.

Turn the Mode Switch to the "Max." position.

Wait until the appliance reaches stationary equilibrium (approx. 10 minutes).

Insert the probe into the flue duct.

Expected measurements should be between:

CO: 0.0015 and 0.0025%.

CO_2: 4.5 - 5.5%.

After taking the measurement:

Turn the Mode Switch back to the "normal" position.

Put the facia back in to its normal position.

SAFETY

Disconnect the electrical supply at the mains and turn off the gas supply at the gas service cock on the appliance before servicing.

After completing the service always test for gas soundness as indicated in BS 6891.

15. 3 COMPONENT ACCESS

To carry out a full and comprehensive service of the appliance remove the following parts to gain access to the components which need to be checked or serviced.

(a) Cabinet Front Panel. Remove by lifting off the supports.

(b) Inner Casing Cover. Check that the electricity supply to the appliance is turned off. Remove the cabinet front panel. Unscrew the four screws securing the cover to the casing and lift off. See Fig. 17.

(c) Facia Panel. Check that the electricity supply to the appliance is turned off. Remove the cabinet front panel. Unscrew the two upper screws as shown in Fig. 17 and hinge down the facia taking care not to distort the pressure gauge capillary tube or electrical connections.

(d) Bottom panel. Hinge down the facia panel. Disengage the front edge of the bottom panel from the two clips and remove the bottom panel from the appliance.

(e) Combustion Chamber Front and Sides. Remove the inner casing cover. Slacken off to the end of the thread but do not remove the two wing nuts securing the combustion chamber. Unhook the securing rods out of the locating holes in the combustion chamber sides. Ease the combustion chamber front and side assembly clear of the appliance. Refer to Fig.22.

(f) Burner Assembly. Remove the combustion chamber front and sides. Pull off the two spark electrode leads and disconnect the flame sense lead at the plastic connector under the inner casing. **NOTE:** The flame sensing lead is attached to the burner. When the burner is removed ensure this lead is fed through the inner casing. Remove the grommet seal to allow the plastic connection to pass through the inner casing. Unscrew the G $^{3}/_{4}$ union nut on top of the gas valve and retain the sealing washer. Unscrew the front burner fixing screw. Lift the burner and ease the union nut through the inner casing sealing grommet.

Remove the burner assembly clear of the inner casing.
Ensure the flame sensing lead passes through the base of the inner casing. See Fig. 23 .

Fig. 23. Burner and Electrode

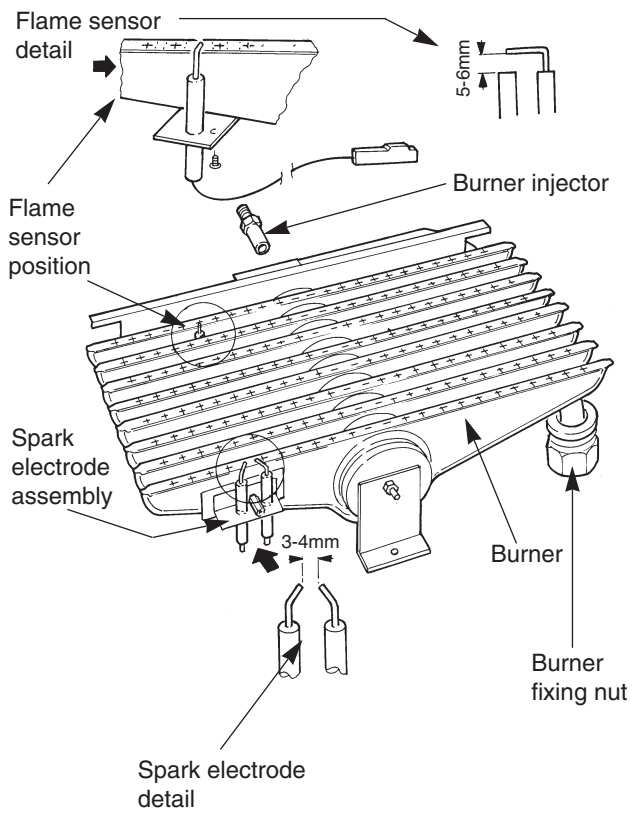

15. 4 SERVICE OF COMPONENTS

Clean the Main Burner. Brush the blade tops and mixing tube with a soft brush and check that all the flame ports are clear. Remove any blockages with a non-metallic brush. Inspect the injector and clean with a soft brush. Replace the injector if it appears damaged. Do not use a wire brush or anything likely to cause damage. Replace the spark and sense electrodes if they appear damaged.

Clean the Gas to Water Heat Exchanger. Cover the burner manifold hole in the combustion chamber bottom panel with a cloth. Clean the heat exchanger using a soft brush. Remove the deposits from the bottom of the combustion chamber. Do not distort any of the blades.

Combustion Chamber Insulation. Examine and replace any pads that are damaged. Remove any dust or deposits using a soft brush after first dampening the pads.

Reassemble the appliance in the reverse order.

Check that all components are in place and correctly fixed. Leave the cabinet front panel to be fitted after checking the operation of the appliance.

15. 5 TEST THE APPLIANCE

On completion of the service and reassembly of the appliance, check for gas soundness and the correct operation of the appliance as described in Section 13-Commissioning.

Refit the cabinet front panel and reset the controls to the users requirements.

16. Replacement Of Parts

16.1 SAFETY

Switch off the electricity and gas supplies before replacing any components. After the replacement of any components, check for gas soundness where relevant and carry out functional checks as described in Section 13 - Commissioning

16.2 COMPONENT ACCESS

To replace components it is necessary to remove one or more sections of the cabinet and cover plates within the appliance as described in Section 15.3. Any 'O' ring or gasket that appears damaged must be replaced. Complete gasket and 'O' ring packs are available for the gas and water connections on the appliance. The facia panel may also need to be hinged down as described in Section 15.3 ,c.

16.3 DRAINING THE APPLIANCE

Check that the electricity supply to the appliance is turned off. Before removing any component holding water it is important that as much water as possible is removed from the appliance.

(a) Central Heating Circuit. Turn off the central heating flow and return valves at the appliance. Fit tubes to the drain taps on the flow and return manifolds and open the drain taps about one turn, make sure that the dust cap on the auto air vent is loosened. See Fig. 30. Close the drain taps when the flow has stopped. Be careful **not to overtighten** the drain taps. Some water will remain in the expansion vessel, pump, diverter valve, water to water and Gas to Water heat exchangers and extra care must be taken when removing these components.

(b) Domestic Hot Water Circuit. Turn off the mains cold supply valve at the appliance and open the lowest hot water tap. A quantity of water will remain in the Water to Water heat exchanger and the diverter valve and extra care must be taken when removing these components.

Replace any components removed from the appliance in the reverse order using new gaskets/'O' rings/sealant where necessary. Always check that any electrical connections are correctly made and that all screws are tight.

16.4 COMPONENT REPLACEMENT

1. Automatic Air Vent.

Remove the inner casing cover as described in Section 15.3 (b).

Drain the central heating circuit as described in Section 16.3 (a).
Remove the circlip and lift the assembly from the appliance.
Unscrew air vent from the pipe. Check the condition of the fibre washer.
Fit the replacement assembly, making sure the 'O' ring is in good condition.
Ensure that the circlip is correctly fitted and the dust cap is

loosened.
Open the valves and fill and re-pressurise the system as described in Section 13.2.

2. Overheat Thermostat. .

Check that the electricity supply to the appliance is turned off.

Remove the inner casing cover as described in Section 15.3 (b).

Carefully pull off the two wires from the thermostat head.

Undo the two M3 screws and remove from the appliance.

Fit the replacement thermostat in the reverse order ensuring that some heat sink compound is between the thermostat and the plate.

3. Gas to Water Heat Exchanger. Check that the electricity supply to the appliance is turned off.

Drain the central heating circuit as described in Section 16.3 ,a.

Remove the inner casing cover, overheat thermostat, central heating sensor, burner and automatic air vent assembly as described in Sections 15.3 ,b and f , 16.4 ,1, 16.4 ,2 and 16.4 ,11. Pull down the flow pipe to free it from the heat exchanger. Disconect the return pipe from the return manifold, turn the pipe to clear the manifold and pull down the pipe to free it from the heat exchanger. The heat exchanger can now be pulled down free of the retaining clips securing it to the flue hood.

Take care that the rear insulation pad does not drop forwards onto the burner.

Fit the replacement heat exchanger in the reverse order ensuring that both the "O" rings are correctly fitted and lubricated and a layer of heat sink compound is on both the thermostats.

Open the valves and fill and re-pressurise the system as described in Section 13.2.

Fig. 24. Flue gas safety device.

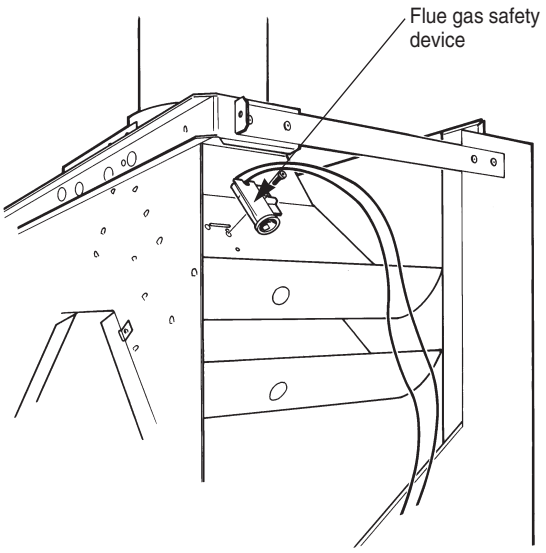

4. Flue Gas Safety Device. Refer to Fig. 24.

Check that the electricity supply to the appliance is turned off. Remove the cabinet front panel as described in Section 15.3, a. Carefully separate the two connections joining the flue gas safety device to the wiring harness. Remove the screw securing the device to the downdraught diverter and remove.

Fit the replacement flue gas safety device in the reverse order ensuring that the device is in the correct location on the downdraught diverter.

5. Combustion Chamber Insulation. Refer to Fig. 25.

Check that the electricity supply to the appliance is turned off.

Drain the central heating circuit as described in Section 16.3, a.

Remove the inner casing cover, combustion chamber front and sides, burner, and Gas to Water heat exchanger as described in Sections 15.3 ,b, e and f, and 16.4 ,6. Remove the fibre insulation pads from the combustion chamber side, rear, and front sections. To avoid the risk of fine particles dampen the pads before removal.

Fit the replacement pads in the reverse order taking care not to damage them.

Open the valves and fill and re-pressurise the system as described in Section 13.2.

Fig. 25. Combustion Chamber Insulation

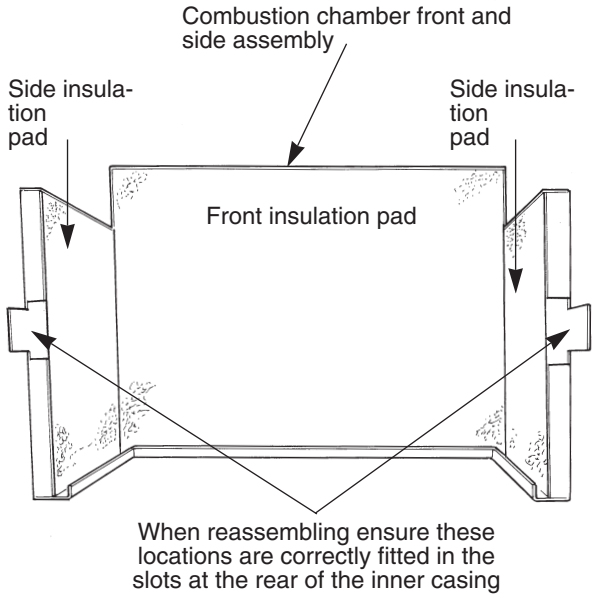

6. Burner. Refer to Fig. 23.

Check that the electricity and gas supplies to the appliance are turned off.

Remove the burner assembly as described in Section 15.3 ,f.

Fit the replacement burner in the reverse order taking care not to damage the electrode leads.

7. Burner Injector. Refer to Fig. 23.

Remove the burner as described in Section 15.3 ,f.

Unscrew the brass injector from the burner.

Fit the replacement injector in the reverse order.

8. Spark Electrode Assembly. Refer to Fig. 23.

Remove the combustion chamber front and sides as described in 15.3 ,e.

Carefully pull off the two electrode leads,

Undo the M4 extended nut and remove the spark electrode assembly from the burner.

Fit the replacement electrode in the reverse order, checking that the spark gap is 3 to 4mm.

9. Flame Sensor. Refer to Fig. 23.

Remove the burner as described in Sections 15.3 ,f and 16.4 ,6.

Undo the M3 screw and remove the sense electrode from the burner.

Fit the replacement electrode in the reverse order, checking that the sense gap is 5 to 6mm.

10. Gas Valve. Refer to Fig. 20.

Check that the electricity and gas supplies to the appliance are turned off.

Hinge down the facia panel into the servicing position as described in Section 15.3 ,c.

Undo the two G¾ inch nuts on the gas valve and the two M4 screws on the gas valve bracket and withdraw the valve.

Whilst supporting the valve carefully pull off the three electrical solenoid plug connections.

Fit the replacement gas valve in the reverse order ensuring the sealing washers are correctly fitted.
Turn on the gas supply and check for soundness.

To set the burner pressure. Refer to Fig. 23.
The minimum and maximum burner pressure must be set after a new gas valve has been fitted.
Follow the procedure described in Section 13.4 - Appliance Operation.
The minimum burner pressure must be set first, since maximum is adjusted simultaneously.
Start the appliance in the domestic hot water mode as described in Section 13.4. - Appliance Operation.
Turn the gas valve switch on the rear of the facia to minimum. Refer to Fig. 27.
Adjust the minimum pressure screw on the gas valve to give a burner pressure of 2.0mbar for natural gas or 5.5mbar for propane.
Turn the gas mode switch on the rear of the facia to maximum.
Adjust the maximum pressure screw on the gas valve to give a pressure of 13.2mbar for natural gas or 35.5mbar for propane.
Turn the gas mode switch on the rear of the facia to normal.
After completing the adjustments, check the minimum and maximum pressures and adjust as necessary.
Ensure the appliance lights in the central heating mode.
It should not be necessary to alter the central heating potentiometer setting when the gas valve only is replaced and the minimum and maximum pressures are set.

11. Central Heating Sensor. Refer to Fig. 22.
Remove the inner casing cover as described in Section 15.3 ,b.
Check that the electricity supply to the appliance is turned off.
Carefully pull off the two leads from the sensor.
Pull off the sensor and spring retaining clip from the pipe.
Fit the replacement sensor in reverse order with a layer of heat sink compound between the faces. Refit the leads.

12. Domestic Hot Water Sensor. Refer to Fig. 29.
Check that the electricity supply to the appliance is turned off.
Hinge the facia panel into the servicing position as described in Section 15.3(c).
Carefully pull off the two leads from the sensor.
Undo and remove the screw, pull off the sensor and spring retaining clip from the pipe.
Fit the replacement sensor in the reverse order ensuring a layer of heat sink compound is between the faces. Refit the leads.

Fig. 26. Appliance Components (lower assembly)

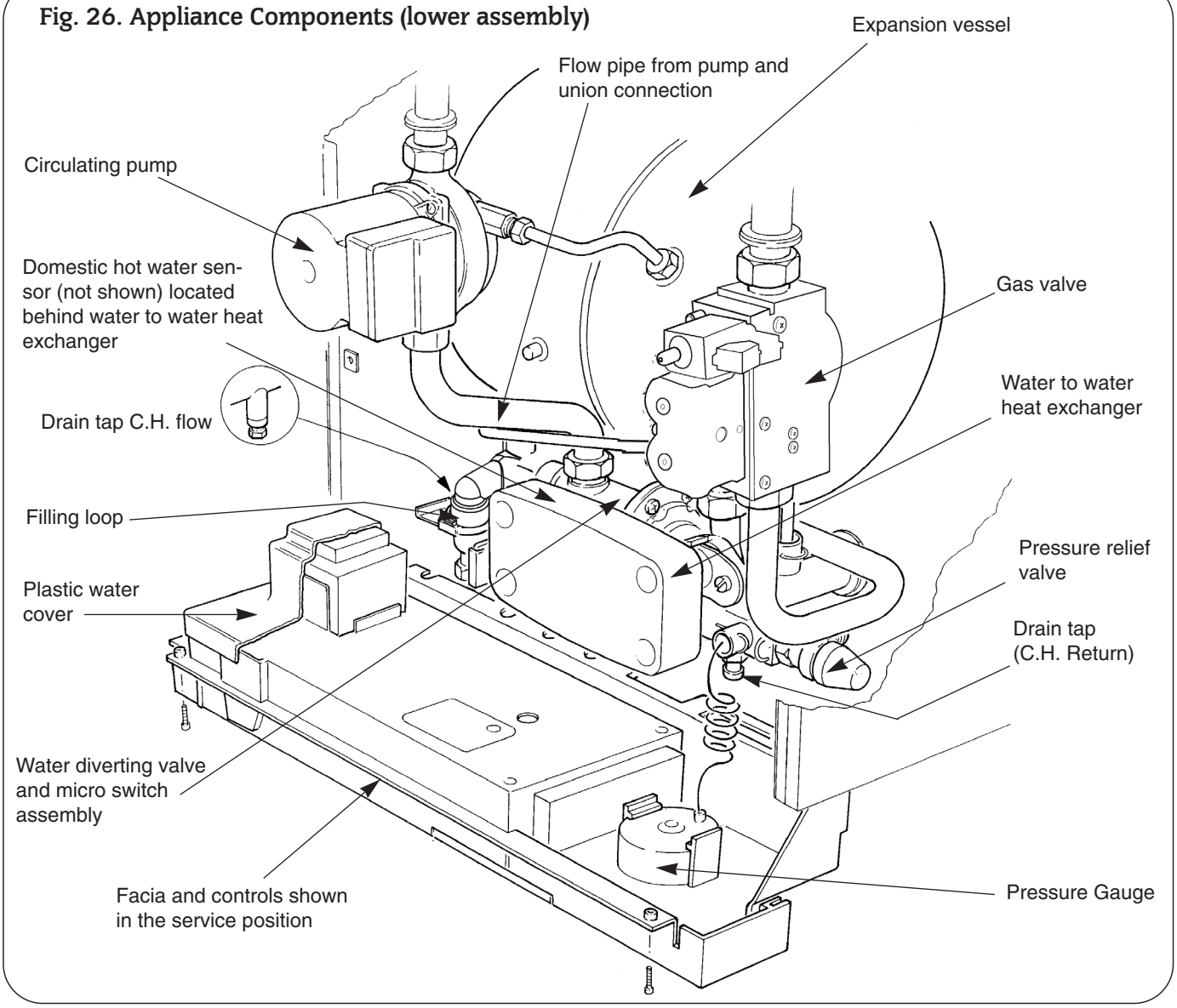

Fig. 27. Circulating pump

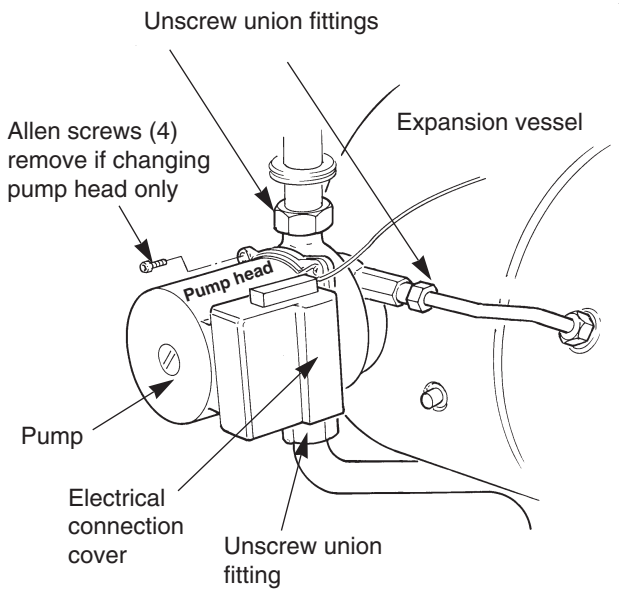

13. Circulating Pump. Refer to Figs. 27.
Check that the electricity supply to the appliance is turned off.
Drain the central heating circuit as described in Section 16.3, a.
Hinge the facia panel into the servicing position as described in Section 15.3, c.
Undo the two union nuts and the pipe to the expansion vessel, remove the pump from the pipe-work. Support the pump and remove the electrical cover.
Disconnect the electrical wires taking note of their positions.
Fit the replacement pump in the reverse order using new sealing washers.
Alternatively replace the pump head only by removing the four Allen screws on the pump, remove the head and support whilst removing the electrical connections. Refit the new head.
Open the valves and fill and re-pressurise the system as described in Section 13.2.
NOTE: The direction of flow should be downwards. The speed should always be set to maximum.

Fig. 28. Expansion Vessel

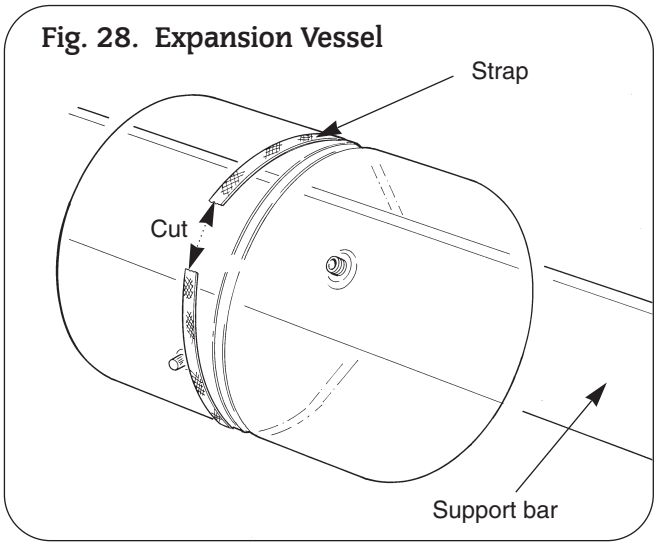

14. Expansion Vessel. Refer to Figs. 28.
Drain the central heating circuit as described in Section 16.3(a).
Hinge the facia panel into the servicing position as described in Section 15.3(c).
Remove gas to water heat exchanger, water to water heat exchanger and pump as described in 16.4 , 3, 19, and 13 and remove the vessel.
Fit the replacement vessel in the reverse order.
Open the valves and fill and re-pressurise the system as described in Section 13.2

15. Pressure Relief Valve. Refer to Fig. 18, 30.
Drain the central heating circuit as described in Section 16.3, a.
Hinge down the facia panel as described in Section 15.3, c.
Remove the bottom panel as described in Section 15.3, d.
Pull out the retaining clip and remove the pressure gauge connection. Undo the discharge pipe connection and remove the valve taking care not to distort the pipework.
Fit the replacement valve in reverse order. Reconnect the discharge pipe.
Open the valves and fill and re-pressurise the system as described in Section 13.2.

16. Water Diverting Valve Micro Switch Assembly.
Refer to Figs. 29, 30.
Check that the electricity supply to the appliance is turned off.
Hinge down the facia panel as described in Section 15.3(c).
Remove the bottom panel as described in Section 15.3(d)
Using a pair of fine nosed pliers, pull the circlip off and remove the micro switch assembly from the valve. Remove the black cover and carefully pull off the connections from the terminals on the micro switches. Refer to Fig. 29.
Withdraw the switch assembly from the appliance.
Fit the replacement micro switch assembly in the reverse order.

17. Water Diverting Valve. Refer to Figs. 29, 30.
Check that the electricity supply to the appliance is turned off.
Drain the central heating and domestic hot water circuits as described in Sections 16.3, a and b.
Hinge down the facia panel into the Servicing Position as described in Section 15.3, c.
Remove the bottom panel, filling loop, water to water heat exchanger and micro switch assembly as described in Section 15.3, d, and Sections 16.3, 16, 19 and 22.
Pull off the large wire clip locating the water diverting valve to the central heating plastic flow manifold on the left hand side of the appliance.
Remove the wire clip securing the copper by-pass pipe to the flow manifold.

Fig. 29. Water Diverting Valve and Micro Switch Assembly.

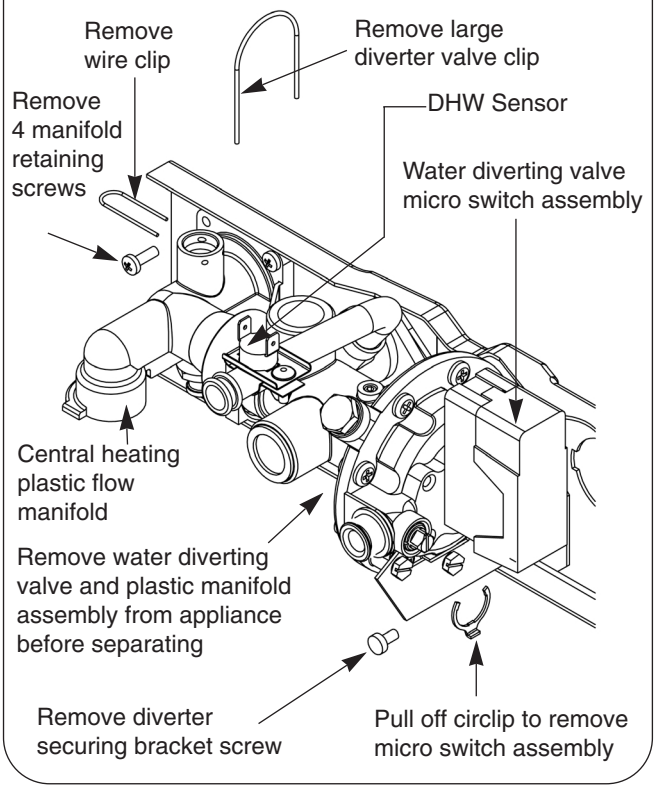

Retain the wire clips.
Carefully ease the by-pass pipe out of the manifold and allow the pipe to swing forwards to clear the manifold connection.
Remove the screw securing the bracket, located at the right hand end of the water diverting valve, to the appliance casing.
Remove the four screws located at the left hand side securing plastic manifold to the appliance.
Remove the water diverting valve and plastic manifold assembly clear of the appliance.
Ease the water diverting valve out of the plastic manifold.
Remove the securing bracket from the valve and the water filter from the valve cold water inlet.
Retain the plastic manifold, fixing screws, support bracket and water filter.
Discard the water diverting valve.
Reassemble the original support bracket, water filter and new 'O' ring seals to the replacement valve.
Lubricate the 'O' ring seal and push the plastic flow manifold onto the valve.
Reassemble the water diverting valve and plastic manifold assembly to the appliance in the reverse order.
Ensure all 'O' ring seals and fibre washers are renewed and replaced correctly and the 'O' rings are lubricated.
Reassemble the appliance in the reverse order.
Open the valves and fill and re-pressurise the system as described in Section 13.2.

18. Inlet Water Filter. Refer to Fig. 30.
Check that the electric supply to the appliance is turned off.
Drain the central heating and domestic circuits as described in Sections 16.3, a and b.
Hinge down the facia panel into the servicing position as described in Section 15.3, c.
Follow the procedures as described in Section 15.3,17 and remove the water diverting valve from the appliance.
Remove the water filter from the cold water inlet.
Discard or clean the filter.
Fit the replacement filter (push fit) in the reverse order.
Reassemble the appliance in the reverse order following the procedure described in Section 15.3, 17.
Open the valves and fill and re-pressurise the system as described in Section 13.2.

19. Water to Water Heat Exchanger. Refer to Fig. 30.
Check that the electricity supply to the appliance is turned off.
Drain the central heating and domestic hot water circuits as described in Sections 16.3, a and b.
Hinge down the facia panel into the servicing position as described in Section 15.3, c.
Remove the bottom panel as described in Section 15.3, d.
Remove the filling loop as described in Section 15.4, 22. Undo the diverter valve connection. Remove the bolt and circlip and pull the heat exchanger forward and away from the appliance.
Fit the replacement heat exchanger in the reverse order.
Open the valves and fill and re-pressurise the system as described in Section 13.2

20. Domestic Hot Water Flow Restrictor.
Remove the water to water heat exchanger assembly as described in Section 15.4, 19.
The plastic flow restrictor is located within the brass housing on the heat exchanger. Refer to Fig. 30.
Fit the replacement flow restrictor and reassemble in the reverse order ensuring the fibre washers and 'O' rings are in place.

Fig. 30 Filling Loop, Water to Water Heat Exchanger and Domestic Hot Water Flow Regulator

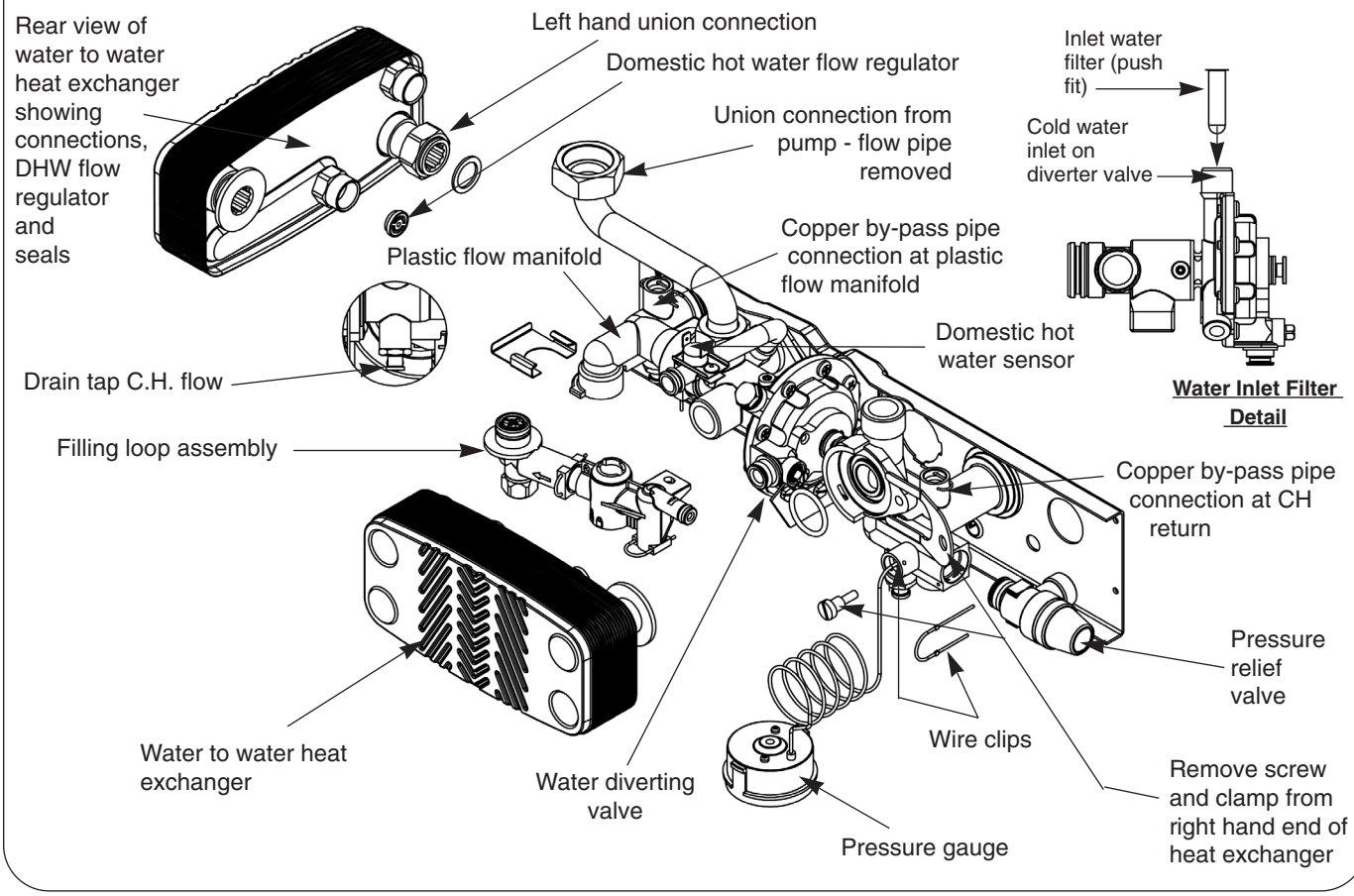

21. Pressure Gauge. Refer to Figs. 30,31.
Check that the electricity supply to the appliance is turned off.
Drain the central heating circuit as described in Section 16.3, a.
Hinge down the facia panel into the servicing position as described in section 15.3, c.
Remove circlip and pull out the capillary sensing bulb in the return manifold.
Prise back the retaining clips securing the gauge to the facia panel and remove.
Fit the replacement gauge in the reverse order ensuring the "O" ring is in place.
Open the valves and fill and re-pressurise the system as described in Section 13.2.

22. Filling Loop. Refer to Fig.30.
Check that the electricity supply to the appliance is turned off.
Drain the central heating circuit as described in Section 16.3, a.
Hinge down the facia panel into the servicing position as described in section 15.3, c.
Remove the screw securing the filling loop to the underside of the water diverting valve.
Remove the clip retaining the filling loop to the plastic flow manifold.
Remove the wire clip joining the two sections of the filling loop and slide the air gap section in the direction of the arrow.
Remove from the appliance.
Fit the replacement assembly in the reverse order.
Open the valves and fill and re-pressurise the system as described in Section 13.2.

23. Control Board. Refer to Fig. 31.
Check that the electricity supply to the appliance is turned off.
Remove the three screws fixing the facia bottom panel to the facia. Remove the facia bottom panel. Retain the panel and screws.
Carefully pull off all the connectors. Disconnect the mains supply lead at terminal ST 12 and the earth connection at the back.
Pull off the three plastic control knobs. Take care not to damage the knobs when pulling off.
Retain the knobs.
Hinge down the facia panel into the Servicing Position as described in Section 15.3, c.
Remove the plastic water cover.
Remove the four corner screws on the back of the facia and separate the metal back panel from the plastic facia.
Ease off the two spark electrode lead connections.
Release the plastic catch at each of the four mounting posts pulling the control board forwards approximately 3mm to prevent the plastic catch from returning.
Pull the board off the remainder of the mounting posts until it is free.
Unplug the transformer from rear of the board. Discard the control board retain the transformer.
Plug in the transformer to the replacement control board. The transformer will fit in one direction only.
Locate the replacement control board over the four mounting posts and push back squarely until the plastic catch on the end of each post clicks into place.
Reassemble in the reverse order and ensure:

i) the spark electrode leads are re-connected. Polarity is not important.
ii) the connectors are fitted to the correct terminals.

Connectors are not interchangeable and will only fit the terminals from which they were removed.
Reassemble the facia panel and facia bottom panel in the reverse order. When replacing the control knobs ensure the knob with the shortest shaft is fitted to the left hand control position.

24. Transformer. Refer to Fig. 31.
Check that the electricity supply to the appliance is turned off.
Remove the control board as described in Section 15.4, 23.
Pull the transformer from the back of the control board.
Fit the replacement transformer in the reverse order.

Fig. 31. Rear of Facia in Servicing Position, Control Board and Transformer.

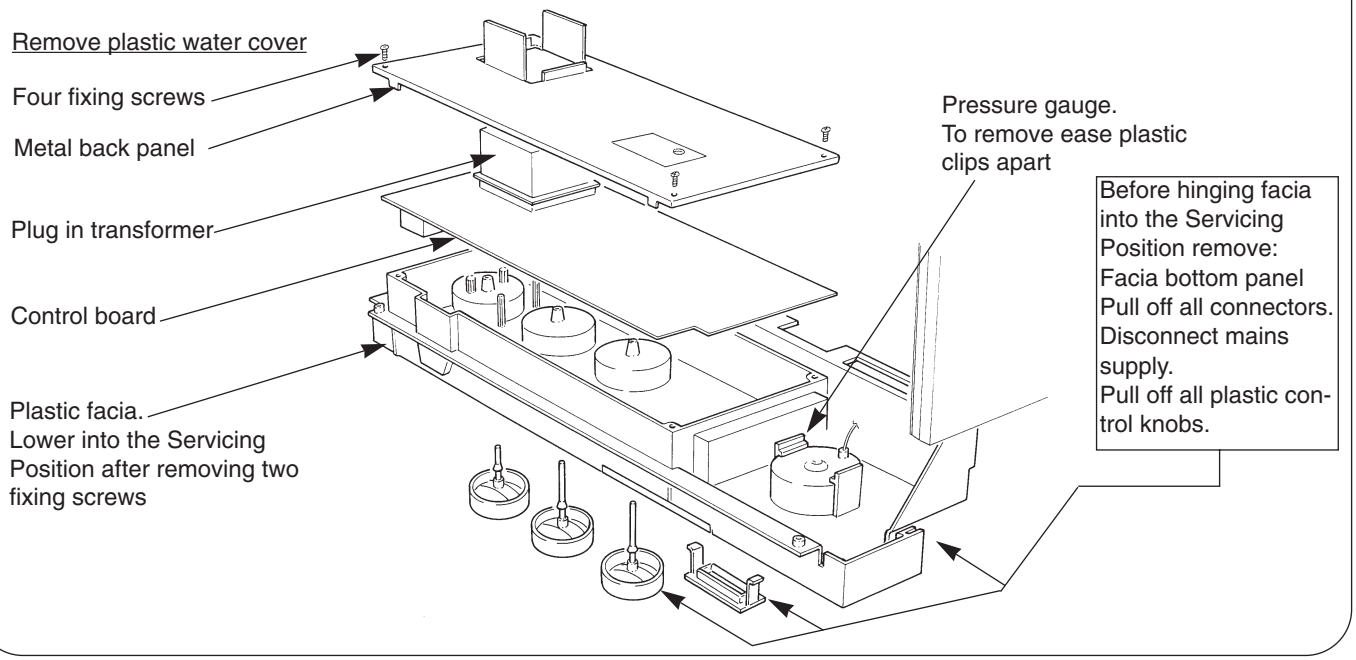

17. Short Parts List

Key No.	G.C. No.	Part	Manufacturer's Reference	Qty	WHS Part No.
26	E80 450	Gas Valve – Natural Gas	Dungs BM771 SL040	1	8 716 102 673 0
26	E80 451	Gas Valve – Propane	Dungs BM771 SL040	1	8 716 102 868 0
78	375 695	Burner – Natural Gas	Aeromatic, Ref. AC 23/05 3582	1	8 716 142 602 0
78	173 012	Burner – L.P.G.	Aeromatic, Ref. AC23/05 3583	1	8 716 142 600 0
80	173 091	Burner Injector – Natural Gas	Stereomatic, Type 7, 4.5mm dia.	1	8 716 140 208 0
80	E00-741	Burner Injector – L.P.G.	Stereomatic, Type 7, 2.78mm dia.	1	8 716 140 209 0
81	375 697	Spark Electrode Assembly	Buccleuch, Ref. BE/3462/SI	1	8 716 142 100 0
82	E01 612	Flame Sensor	Buccleuch, Ref. BE/3461/SI	1	8 716 120 345 0
95	299 515	Ignition Harness	Buccleuch, Ref. BE/3469/SI	1	8 716 120 229 0
61	299 352	Gas to Water Heat Exchanger	Giannoni, Ref. PR22 323 003. D2107	1	8 716 142 800 0
68	E00 716	Automatic Air Vent	Intermes, Ref. 02.05.010	1	8 716 140 500 0
85	299 506	System Pressure Gauge	Cewal, Spec. D2111	1	8 716 142 300 0
40	375 699	Pressure Relief Valve	Caleffi, Ref. 312439	1	8 716 142 404 0
29	173 006	Circulating Pump	Grundfoss, Ref. 50 50 6601	1	8 716 143 100 0
25	173 001	Expansion Vessel	Zilmet, Ref. 301010	1	8 716 142 500 0
42	299 353	Water to Water Heat Exchanger	Giannoni, Ref. PVW 12 E. D2108	1	8 716 142 900 0
34	173 005	Diverter Valve	Giannoni, Ref. V37/OM/I/F/4/A. D2109	1	8 716 142 401 0
104	379 215	DHW Flow Restrictor	Type E - White 8 Litre	1	8 716 141 054 0
105	378 416	Domestic Water Filter	MPM, V3326	1	8 716 148 400 0
109	E01 840	Charging Link Assembly	WHS	1	8 716 120 320 0
84	173 014	Circuit Board – OF/BF	Junkers Bosch, Type Heatronic II KE	1	8 748 300 220 0
96	299 516	Transformer	ERA, Ref. BV 066-0188.0	1	8 747 201 248 0
60	375 696	Thermister Sensor	Elmwood, Ref. 6655 - 9003 - 5	2	8 716 142 302 0
62	173 015	Overheat Thermostat	Elmwood, Ref. 2455 R - 98 - 789	1	8 716 142 303 0
101	173 017	Flue Spillage Thermostat – OF	Industrielektrik	1	8 716 120 238 0
133	299 354	Combustion Chamber Insulation Pack	WHS	1	7 716 192 204 0
134	299 355	Fibre Washer Pack	WHS	1	7 716 192 205 0
135	299 356	'O' Ring Pack	WHS	1	7 716 192 207 0
136	299 357	Fuse Pack	WHS	1	7 716 192 206 0

Acccessories For 24CDi OF

G.C.No.	Part	WHS Part No.
299 361	Digital Single Channel Programmer	7 716 192 003
299 360	Mechanical Single Channel Programmer	7 716 192 002
E01 053	Digistat CD (Radio Controlled Thermostat)	7 716 192 006
E00 755	OF Open Vent Kit	7 716 192 106
	Pre-system Filling Loop	7 716 192 102
	Mini Expansion Vessel	7 716 192 105

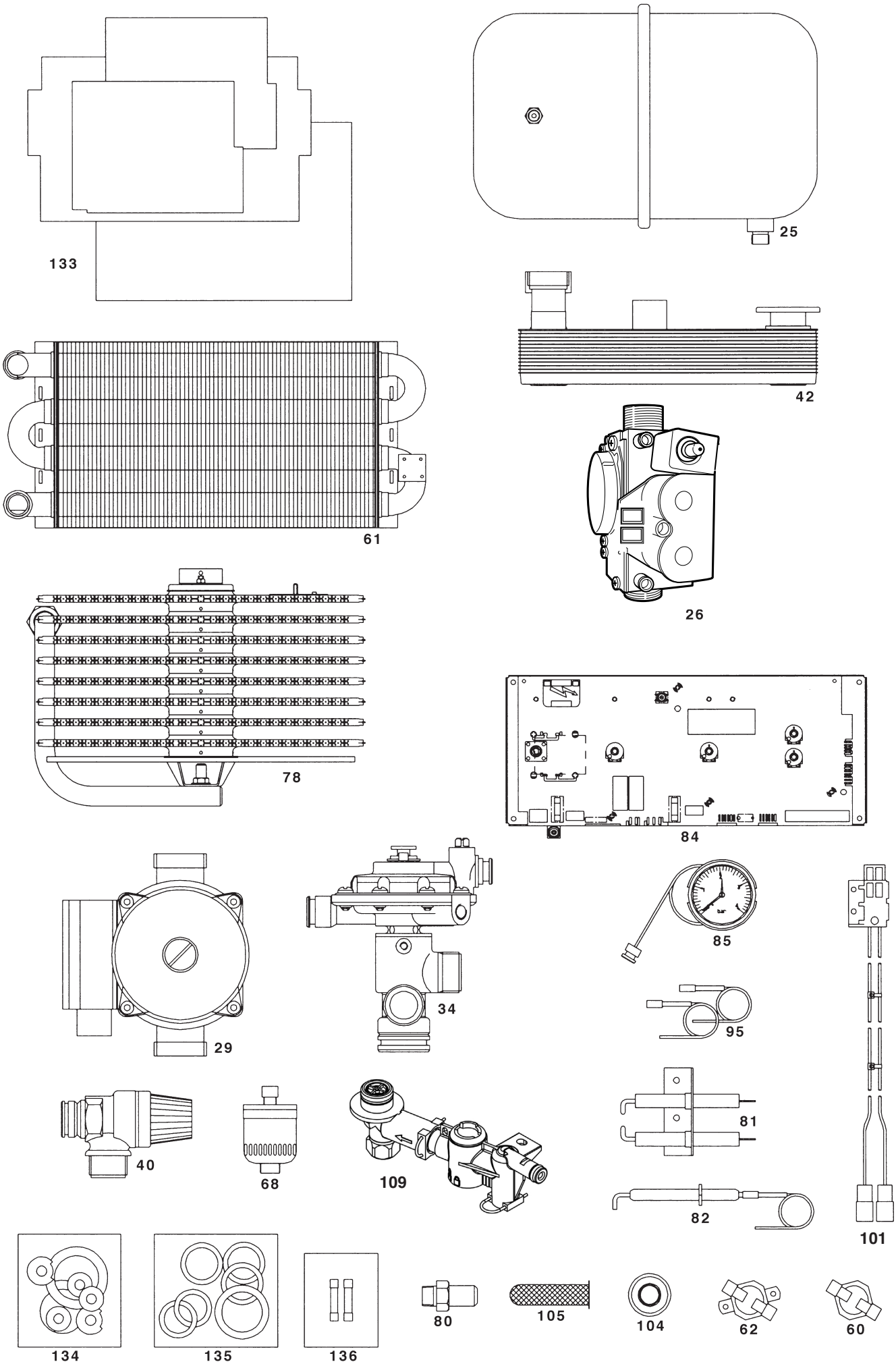
133
25
42
61
26
78
84
29
34
85
95
40
68
109
81
82
101
134
135
136
80
105
104
62
60

18. Operational Flow Diagrams

CENTRAL HEATING FUNCTION

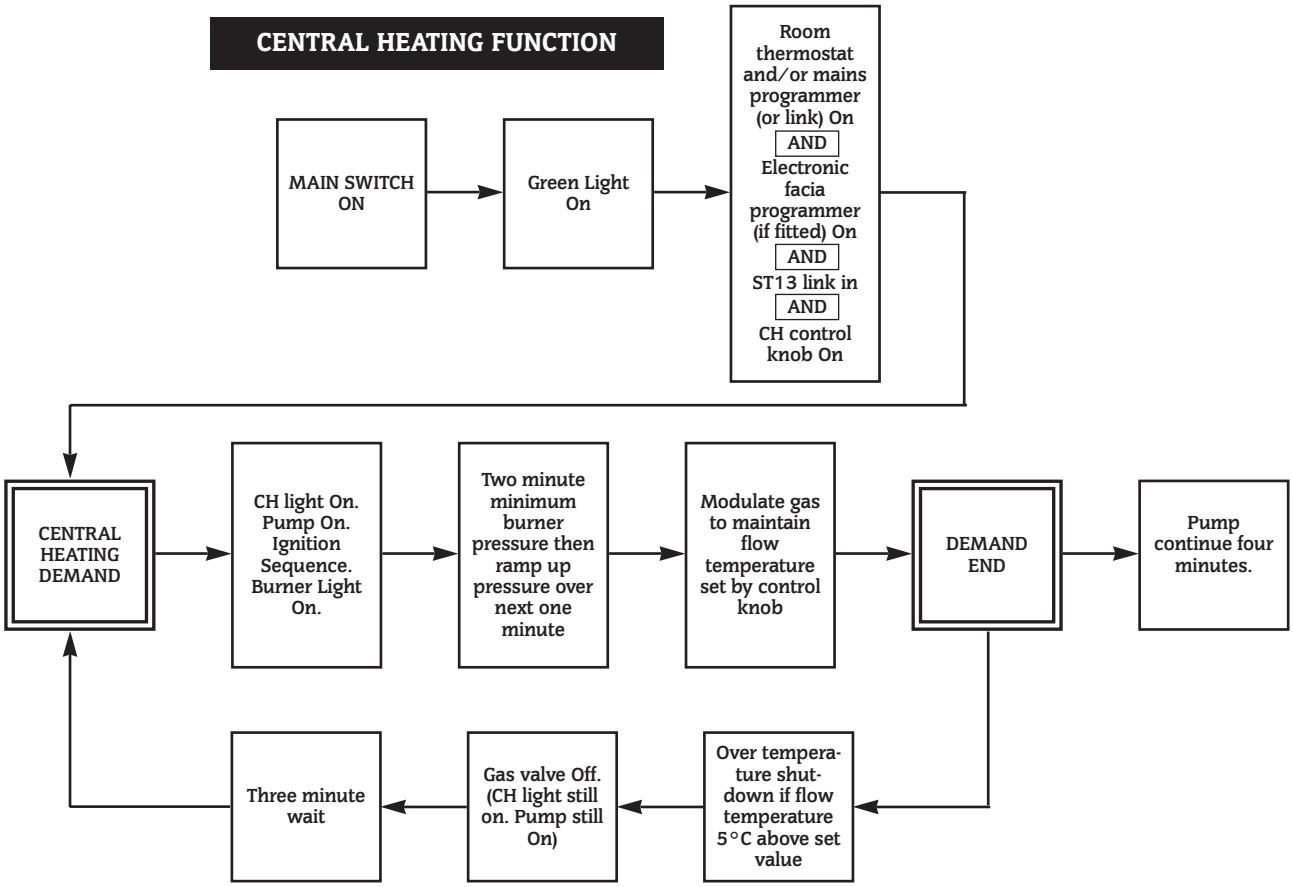

DOMESTIC HOT WATER FUNCTION

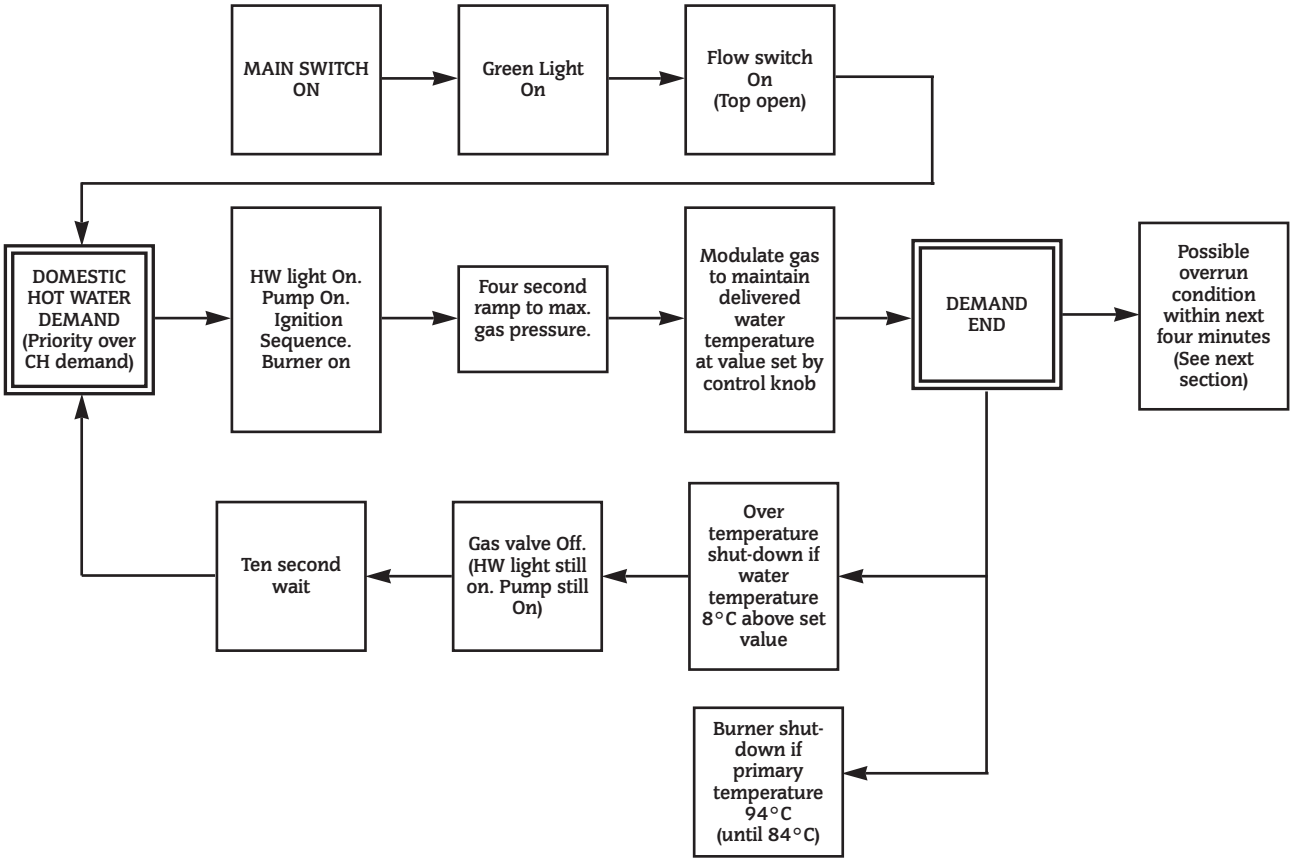

OVERRUN FUNCTION

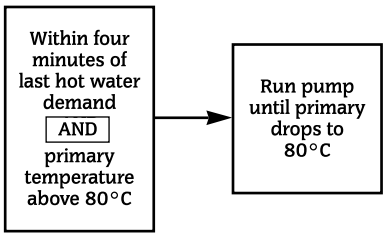

AUTOFROSTAT FUNCTION

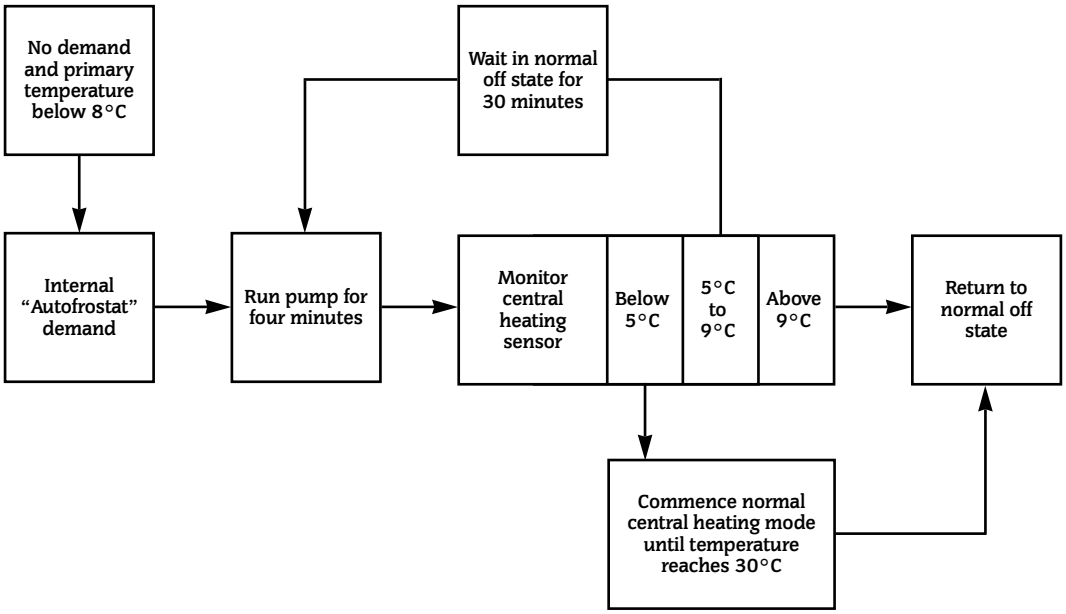

19. Fault Finding

Note: This fault-finding information is for guidance only. Worcester Heat Systems cannot be held responsible for costs incurred by persons not deemed to be competent.

The electronic control system for this boiler incorporates four lights on the facia. These are used to show normal operating status. But as a secondary function, by flashing, they can also be used to help provide fault diagnostics. Therefore, with individual or groups of lights being permanently off, on or flashing, every normal fault can be identified.

To use the fault finding system, select a box below which represents the light situation during your fault. Then refer to the appropriate following section. This fault-finding system assumes that the appliance has been operating correctly until the time of failure.

PRELIMINARY CHECKS

Preliminary electrical system checks are the first electrical checks to be carried out during a fault-finding procedure. On completion of the Service/Fault-Finding task which has required the breaking and remaking of electrical connections, check (a) EARTH CONTINUITY, (b) SHORT CIRCUIT CHECK, (c) POLARITY and (d) RESISTANCE TO EARTH.

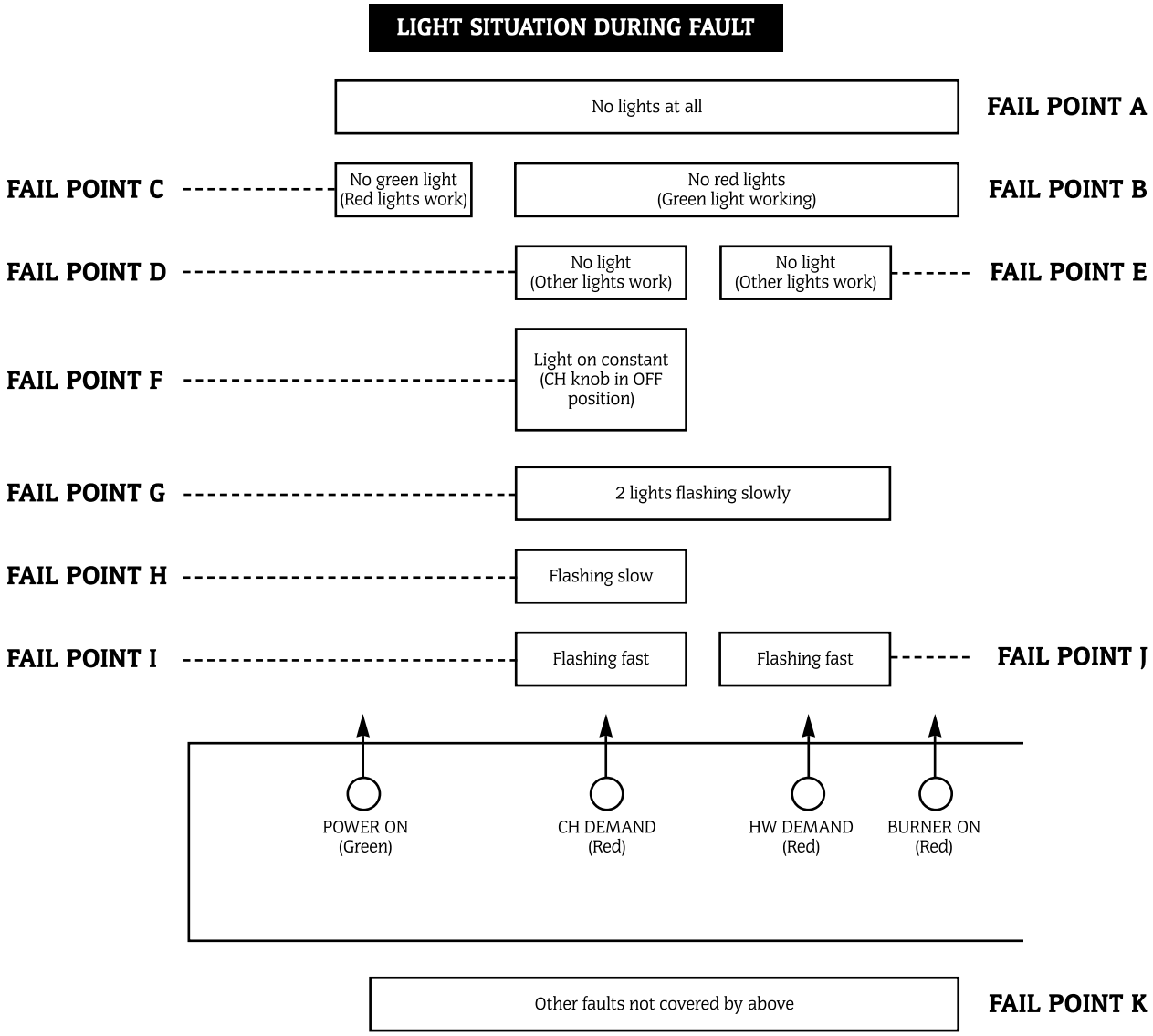

Note:

Slow flash is once per second, fast flash is five times per second.

Slow flash can only be cleared by using the facia reset button (press for at least one second).

Fast flash is cleared by removing fault and/or main switch off/on.

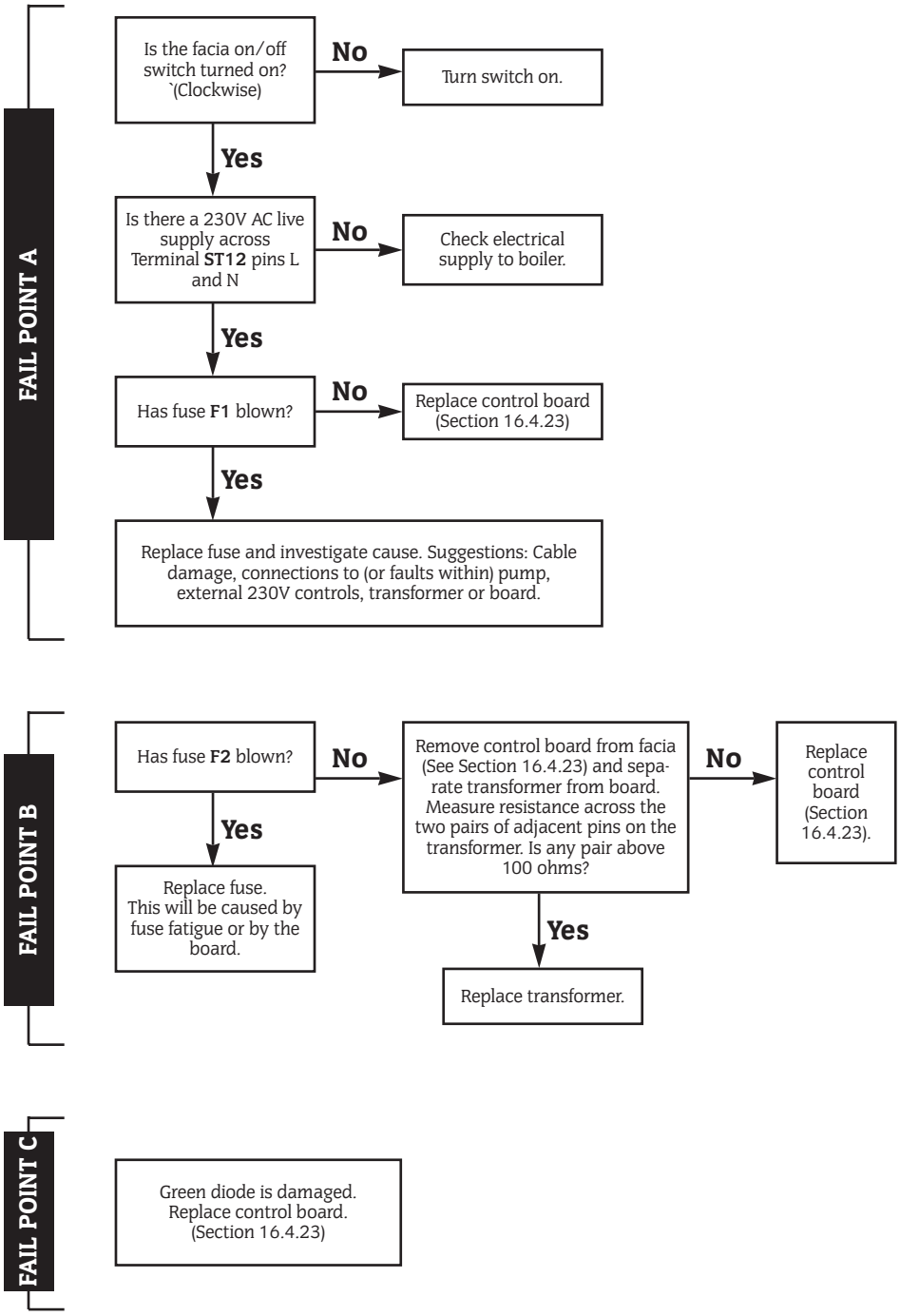
FAIL POINT A
Is the facia on/off switch turned on? `(Clockwise)
No
Turn switch on.
Yes
Is there a 230V AC live supply across Terminal ST12 pins L and N
No
Check electrical supply to boiler.
Yes
Has fuse F1 blown?
No
Replace control board (Section 16.4.23)
Yes
Replace fuse and investigate cause. Suggestions: Cable damage, connections to (or faults within) pump, external 230V controls, transformer or board.
FAIL POINT B
Has fuse F2 blown?
No
Remove control board from facia (See Section 16.4.23) and separate transformer from board. Measure resistance across the two pairs of adjacent pins on the transformer. Is any pair above 100 ohms?
No
Replace control board (Section 16.4.23).
Yes
Replace fuse. This will be caused by fuse fatigue or by the board.
Yes
Replace transformer.
FAIL POINT C
Green diode is damaged. Replace control board. (Section 16.4.23)

FAIL POINT D

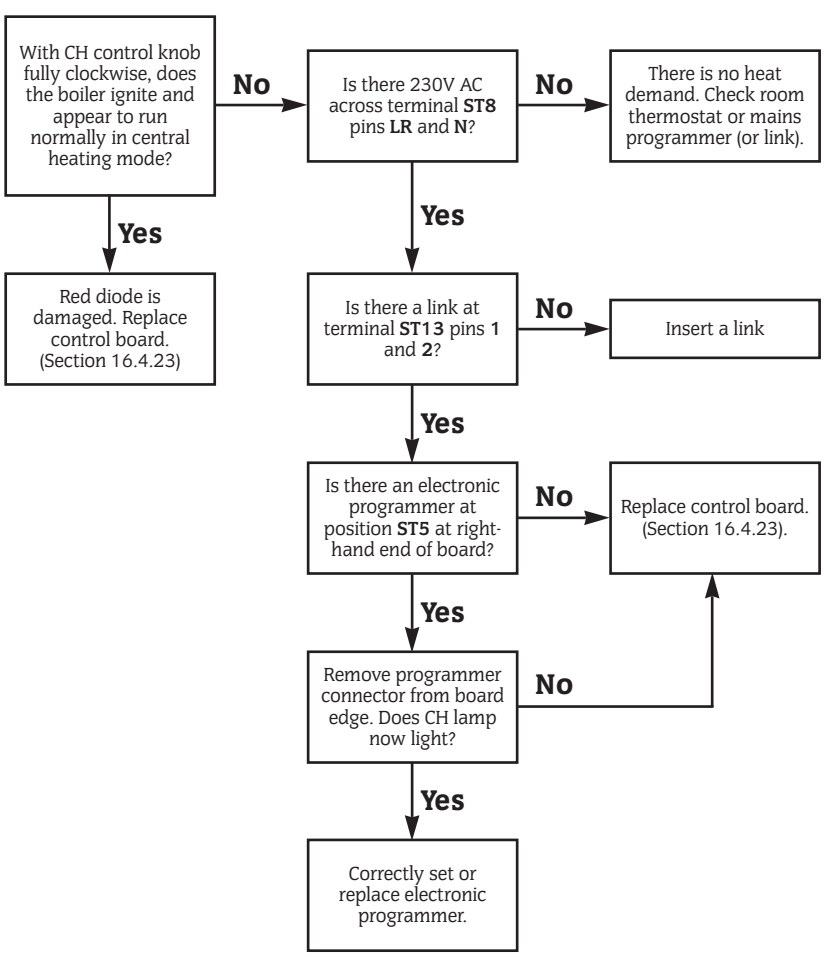

FAIL POINT E

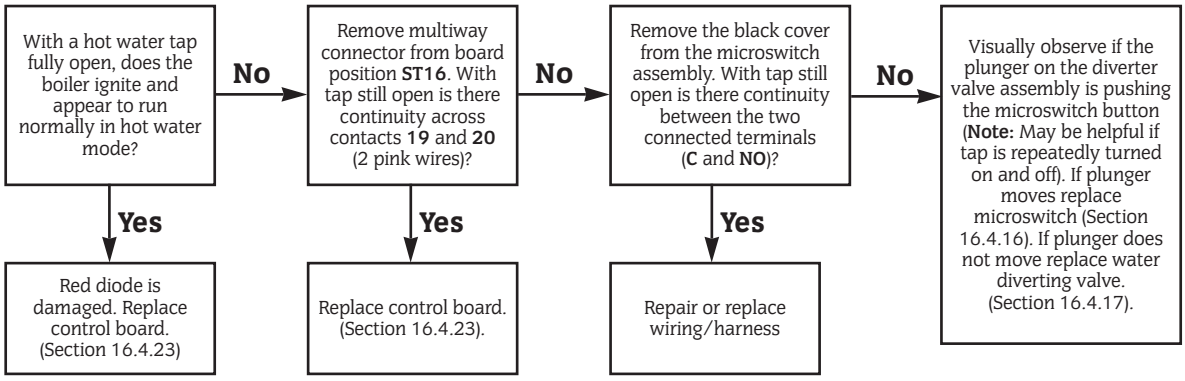

FAIL POINT F

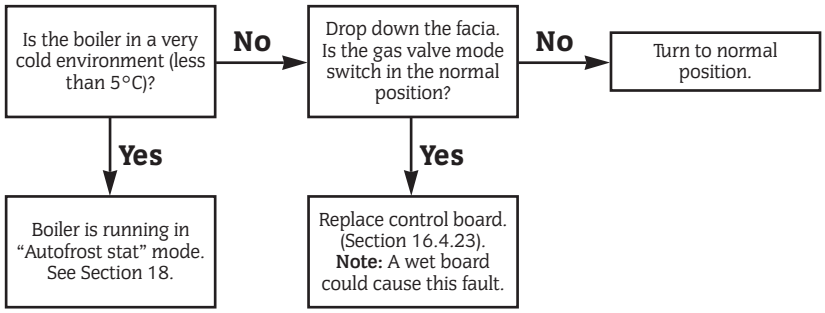

FAIL POINT G "Primary Overheat"

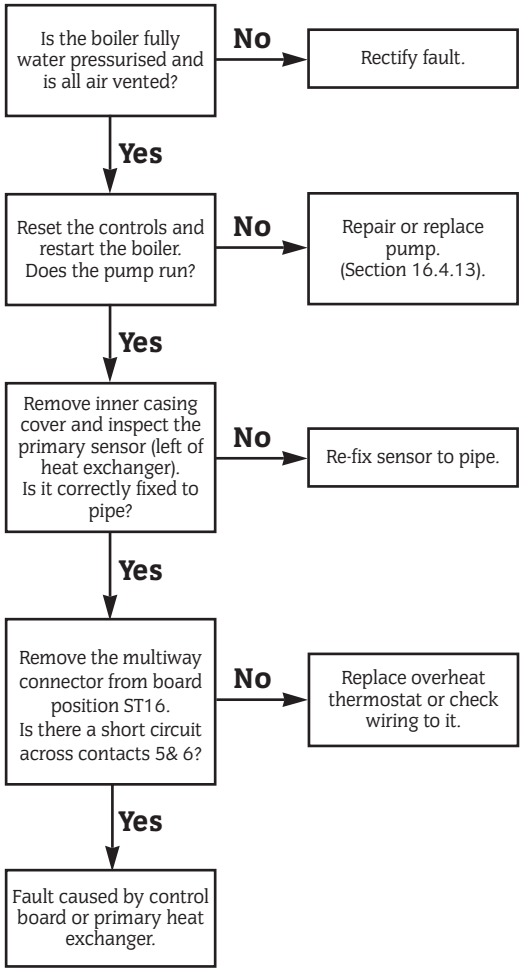

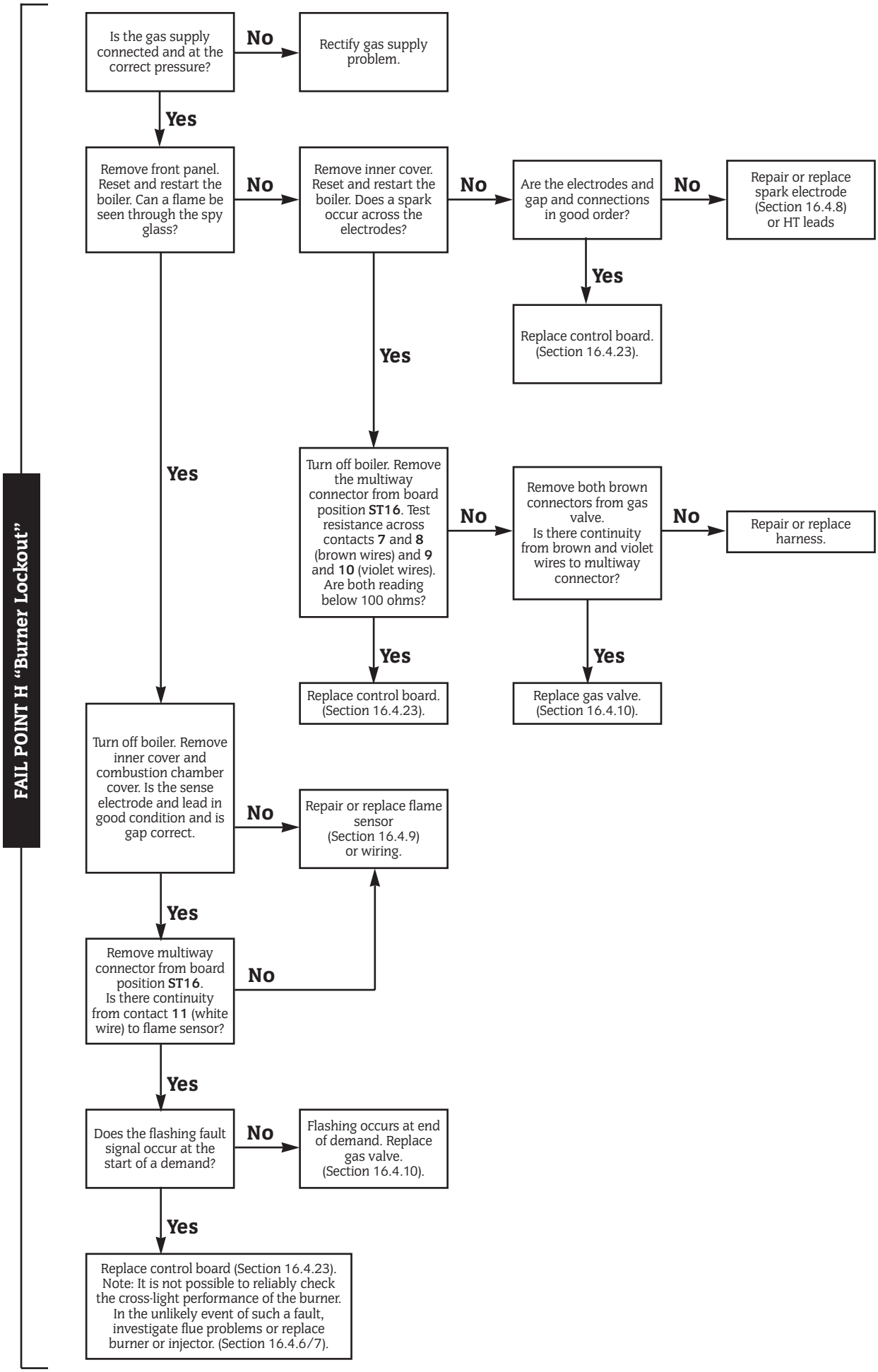
FAIL POINT H "Burner Lockout"
Is the gas supply connected and at the correct pressure?
No
Rectify gas supply problem.
Yes
Remove front panel. Reset and restart the boiler. Can a flame be seen through the spy glass?
No
Remove inner cover. Reset and restart the boiler. Does a spark occur across the electrodes?
No
Are the electrodes and gap and connections in good order?
No
Repair or replace spark electrode (Section 16.4.8) or HT leads
Yes
Replace control board. (Section 16.4.23).
Yes
Turn off boiler. Remove the multiway connector from board position ST16. Test resistance across contacts 7 and 8 (brown wires) and 9 and 10 (violet wires). Are both reading below 100 ohms?
No
Remove both brown connectors from gas valve. Is there continuity from brown and violet wires to multiway connector?
No
Repair or replace harness.
Yes
Replace control board. (Section 16.4.23).
Yes
Replace gas valve. (Section 16.4.10).
Yes
Turn off boiler. Remove inner cover and combustion chamber cover. Is the sense electrode and lead in good condition and is gap correct.
No
Repair or replace flame sensor (Section 16.4.9) or wiring.
Yes
Remove multiway connector from board position ST16. Is there continuity from contact 11 (white wire) to flame sensor?
No
Yes
Does the flashing fault signal occur at the start of a demand?
No
Flashing occurs at end of demand. Replace gas valve. (Section 16.4.10).
Yes
Replace control board (Section 16.4.23). Note: It is not possible to reliably check the cross-light performance of the burner. In the unlikely event of such a fault, investigate flue problems or replace burner or injector. (Section 16.4.6/7).

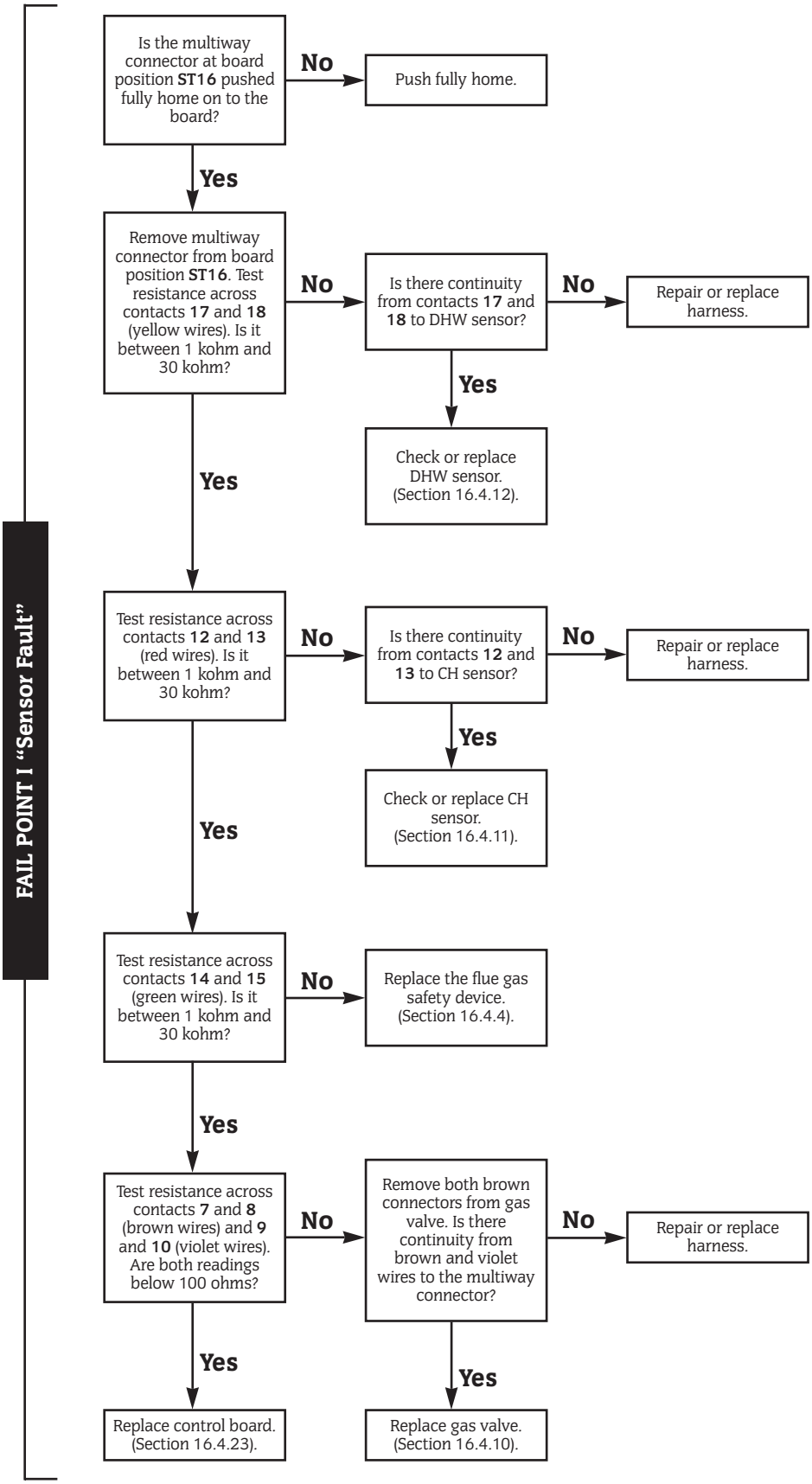
FAIL POINT I "Sensor Fault"
Is the multiway connector at board position ST16 pushed fully home on to the board?
No
Push fully home.
Yes
Remove multiway connector from board position ST16. Test resistance across contacts 17 and 18 (yellow wires). Is it between 1 kohm and 30 kohm?
No
Is there continuity from contacts 17 and 18 to DHW sensor?
No
Repair or replace harness.
Yes
Check or replace DHW sensor. (Section 16.4.12).
Yes
Test resistance across contacts 12 and 13 (red wires). Is it between 1 kohm and 30 kohm?
No
Is there continuity from contacts 12 and 13 to CH sensor?
No
Repair or replace harness.
Yes
Check or replace CH sensor. (Section 16.4.11).
Yes
Test resistance across contacts 14 and 15 (green wires). Is it between 1 kohm and 30 kohm?
No
Replace the flue gas safety device. (Section 16.4.4).
Yes
Test resistance across contacts 7 and 8 (brown wires) and 9 and 10 (violet wires). Are both readings below 100 ohms?
No
Remove both brown connectors from gas valve. Is there continuity from brown and violet wires to the multiway connector?
No
Repair or replace harness.
Yes
Replace control board. (Section 16.4.23).
Yes
Replace gas valve. (Section 16.4.10).

FAIL POINT J "Flue Spillage Fault"

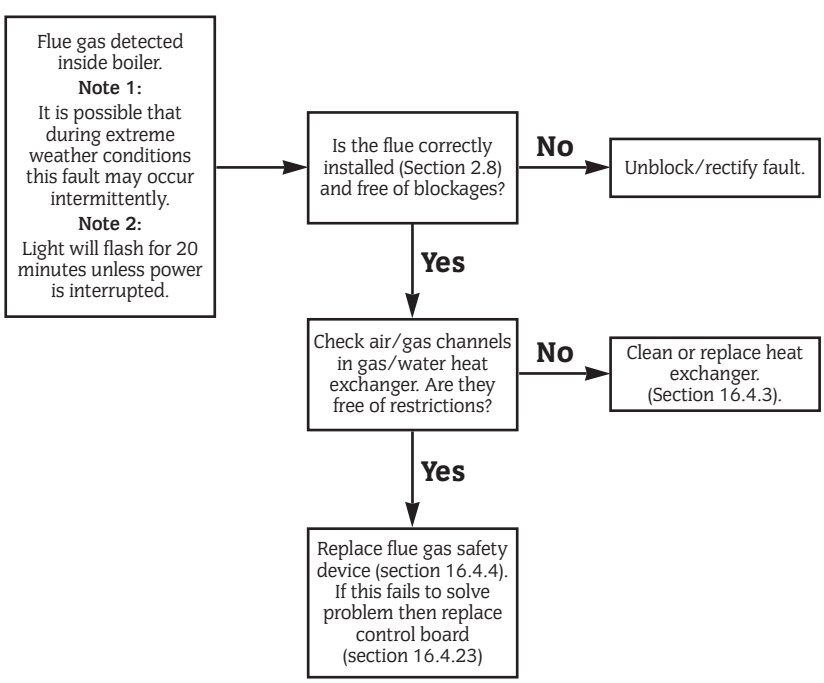

FAIL POINT K

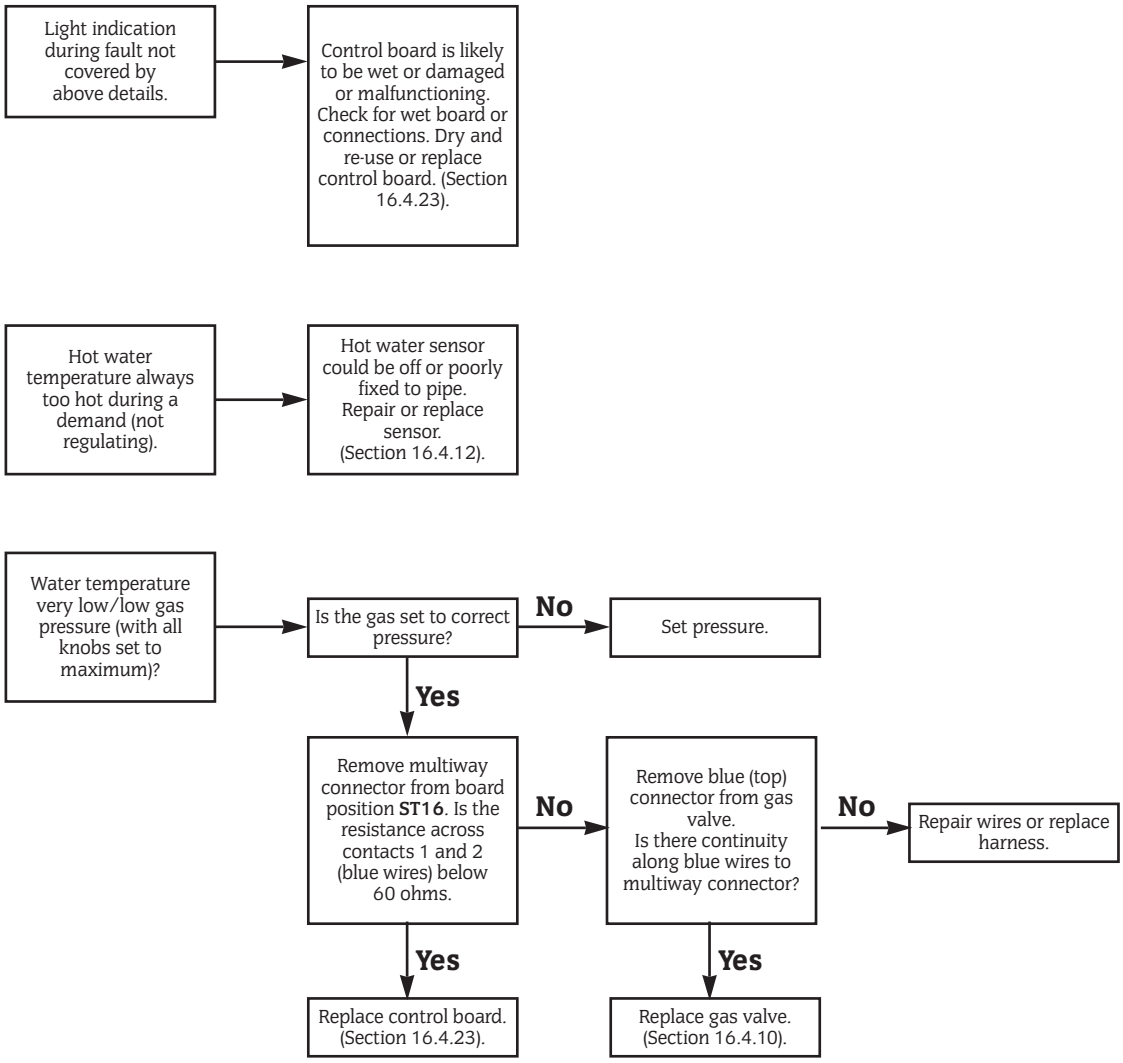

20. Conversion Instructions

ONLY COMPONENTS SUPPLIED BY WORCESTER HEAT SYSTEMS SHOULD BE USED.

ONLY COMPETENT PERSONNEL SHOULD ATTEMPT THE CONVERSION.

CONVERSION FROM NATURAL GAS TO LPG SHOULD NOT BE CARRIED OUT ON APPLIANCES INSTALLED IN A ROOM OR INTERNAL SPACE BELOW GROUND LEVEL

Conversion Kit LPG to NG	7 716 192 307
Conversion Kit NG to LPG	7 716 192 308

1. Ensure the gas service cock is turned **OFF** and the electrical supply is **ISOLATED**.
2. Refer to the Servicing Instructions to remove the cabinet front panel and inner casing.
3. Follow the dismantling instructions to remove the burner. Refer to Section: Inspection and Servicing.
4. Remove the injector and replace with the relevant injector from the kit. Refer to Section: Inspection and Servicing.
5. Remove the nut, end cap and bracket at the opposite end of the burner. If the conversion is LPG to NG it is necessary to remove the gauze. If the conversion is NG to LPG it is necessary to fit the gauze supplied in the kit.
6. Refit the end cap ensuring that the support bracket is in the correct orientation.
7. Remove the gas valve and replace with the gas valve supplied in the kit. Refer to Section: Replacement of Parts.
8. Re-assemble the burner and inner casing.
9. Turn on the gas and electricity supplies and follow the commissioning procedure to confirm gas soundness and correct boiler operation.
10. Check and adjust the setting pressures to the values in the table below and adjust if necessary. Refer also to the Installation and Service Instructions Section: Replacement of Parts "To Set the Burner Pressure".
11. Refit the plastic sealing cap to the gas valve modulating valve adjuster and seal with a dab of paint or similar.
12. Turn off the boiler and when cool peel off the arrow from the data plate on the combustion chamber front panel and re-stick against the gas type for which the boiler has been converted and adjusted.
13. Replace the boiler front panel.

The conversion is now complete.

NOMINAL BOILER RATINGS (10 Minutes After Lighting)			
BOILER ADJUSTED FOR G20 (Natural Gas)			
INPUT (Net)		BURNER SETTING PRESSURE	
kW	Btu/h	m bar.	in. wg.
10.4 DHW	35,500	2.0	0.8
13.8 CH	47,100	3.5	1.4
27.0 MAX	92,100	13.2	5.3
BOILER ADJUSTED FOR G31 (Propane)			
10.4 DHW	35,500	5.5	2.2
13.8 CH	47,100	7.2	2.9
27.0 MAX	92,100	35.5	14.4

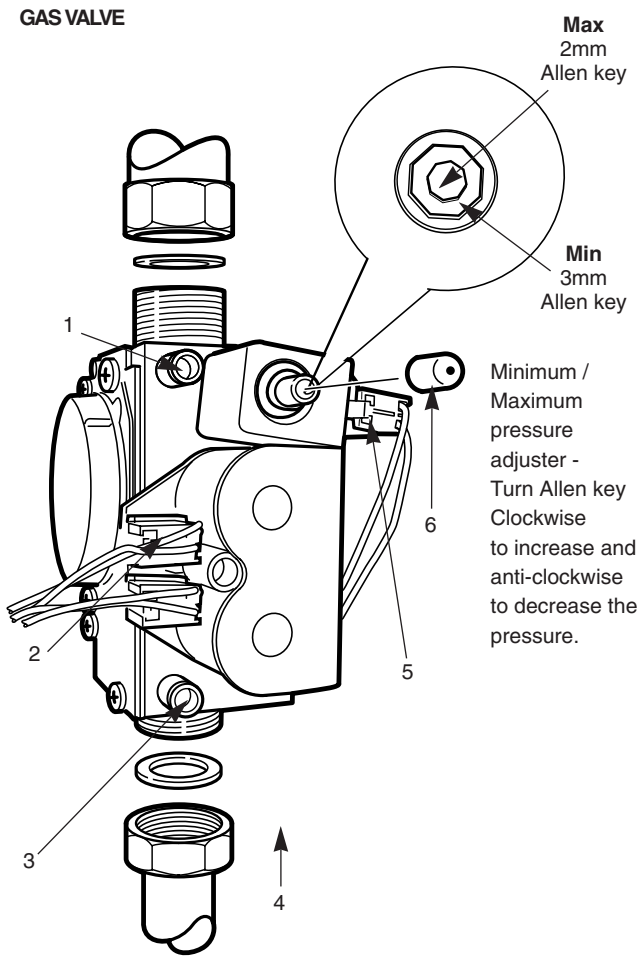

1. Burner pressure test point
2. Main gas valve connections
3. Inlet pressure test point
4. Gas valve bracket
5. Electrical connections modulator (Blue:Blue)
6. Gas valve sealing cap

This manual is to be used in conjunction with the variant part number of the bar code below:

8716120249

WORCESTER

Bosch Group

Worcester Heat Systems Limited, Cotswold Way, Warndon, Worcester WR4 9SW.
Telephone: (01905) 754624. Fax: (01905) 754619.
Technical Helpline 08705 266241.

PUBLICATION 8 716 145 064L 01/03

WORCESTER

Bosch Group

24CDi RSF

WALL MOUNTED COMBINATION BOILER FOR CENTRAL HEATING AND MAINS FED DOMESTIC HOT WATER

INSTALLATION INSTRUCTIONS

HORIZONTAL

TWIN TUBE FLUE SYSTEM

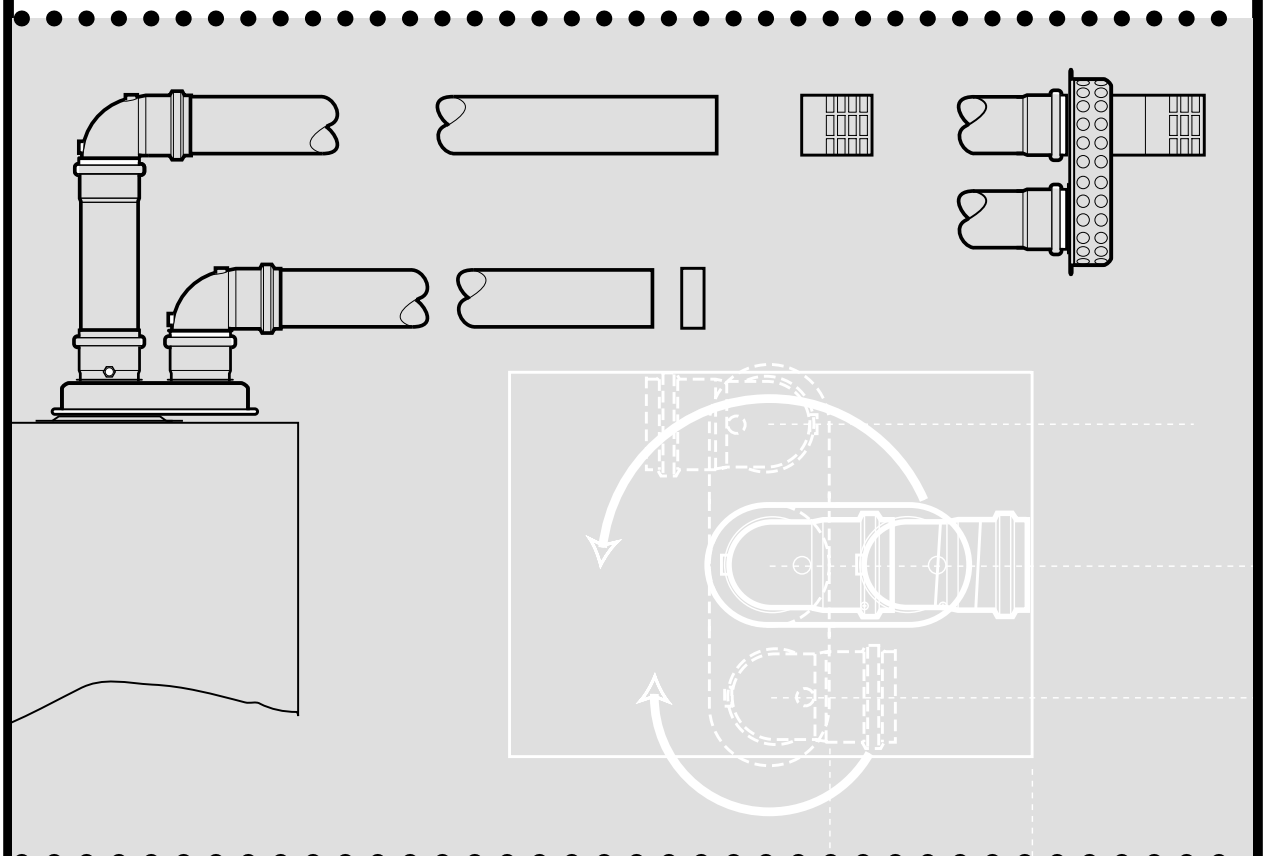

IMPORTANT: THIS BOOKLET MUST BE READ IN COJUNCTION WITH THE APPLIANCE INSTALLATION AND SERVICE INSTRUCTIONS

IMPORTANT: THESE INSTRUCTIONS APPLY IN THE UK ONLY.THESE INSTRUCTIONS ARE TO BE LEFT WITH THE USER OR AT THE GAS METER.

Introduction

The twin tube flue system is designed offer greater flexibility in horizontal flue applications and is constructed from easily assembled components. Below is a list of kits with the options of 90°, 45° bends and a choice of two terminal options (Individual or combined). When individual terminals are used the flue outlet can be positioned independently of the air inlet as long as the guidelines in site requirements are adhered too and the installation complies with BS 5440 parts 1,2 and the appropriate building regulations.

Available kits

Twin flue adapter kit supplied with these instructions.
…….....7 716 191 061
1 Metre tube kits with support bracket……...7 716 191 062
90° Elbows one per kit…….....7 716 191 063
45° Elbows two per kit…….....7 716 191 064
Individual terminal kit, inlet and outlet……...7 716 191 065
Combined twin tube terminal kit……. 7 716 191 066
A guard is available from Tower Components, Vale Rise, Tonbridge,TN9 1TB for the combined terminal type GC 393 547 , Alternatively a guard with the following dimensions or larger may be used 370 mm high 280mm wide 230 deep.

Contents of this pack

This kit contains the following components
Concentric to 80mm twin tube adapter.
4 x silicon seals.
4 x screws self-tapping. (4.2 x 45 long)
4 x screws M5 hex slot 121mm long
1 x adapter plate with seals fitted.
2 x 90° M/F bends with Ø56 mm restrictor.
Installation Instructions for all horizontal outlets.

Site requirements

The flue system requires a minimum of 300mm clearance above the boiler casing or 150mm above the termination of any vertical extension tube (see fig 1).
The boiler when fitted with a twin flue system is suitable for installation within a closed compartment only when the compartment ventilation is equal to or greater than the figures given in the table below.

MINIMUM FREE AREAS REQUIRED Table 1

POSITION OF VENTS	AIR FROM THE ROOM	AIR DIRECTLY FROM OUTSIDE
HIGH LEVEL	270 cm^2	135 cm^2
LOW LEVEL	270 cm^2	135 cm^2

Refer to BS 6798 and BS 5440:2 for additional information

The flue system when installed must comply with the current issue of BS 5440 parts 1 & 2. A minimum of 25mm must be maintained from any combustible surface and the products tube including when passing through a wall.
Terminals must be sighted in accordance with BS 5440:1

PRODUCTS AND AIR TUBES MUST NOT BE SITED ON OPPOSITE WALLS OF A BUILDING.

TERMINAL POSITION	MIN. DISTANCE
A– Directly below an openable window or other opening e.g. air brick.	300 mm (12 in.)
B– Below gutters, soil pipes or drain pipes.	75 mm (3 in.)
C– Below eaves.	200 mm (8 in.)
D– Below balconies or car port roof.	200 mm (8 in.)
E– From vertical drain pipes and soil pipes.	75 mm (3 in.)
F– From internal or external corners.	300 mm (12 in.)
G– Above ground, roof or balcony level.	300 mm (12 in.)
H– From a surface facing a terminal.	600 mm (24 in.)
I– From a terminal facing a terminal	1200 mm (47 in.)
J– From an opening in a car port (e.g. door window) into dwelling.	1200 mm (47 in.)
K– Vertically from a terminal on the same wall.	1500 mm (59 in.)
L– Horizontally from a terminal on the same wall.	300 mm (12 in.)
M– From door, window or air vent (achieve where possible).	300 mm (12 in.)

Design of flue system

Tables 2 & 3 below show the maximum possible flue lengths for both Natural gas & L..P.G. In various configurations, the minimum length possible for ether the air or products tube is 1000 mm.
*The bends contained in twin flue adapter kit are to be fitted in all applications, the bends mentioned in tables 2,3 are additional.

Table 2 Natural gas only

Flue type	Maximum flue length individual terminals	Maximum flue length combined terminal
Straight runs	7,500 mm	7,000 mm
Up to 2x 90° bends* in each tube run	6,000 mm	5,500 mm
Up to 3 x 45° bends* in each tube run	6,000 mm	5,500 mm

Fig. 1. Twin tube flue component assembly

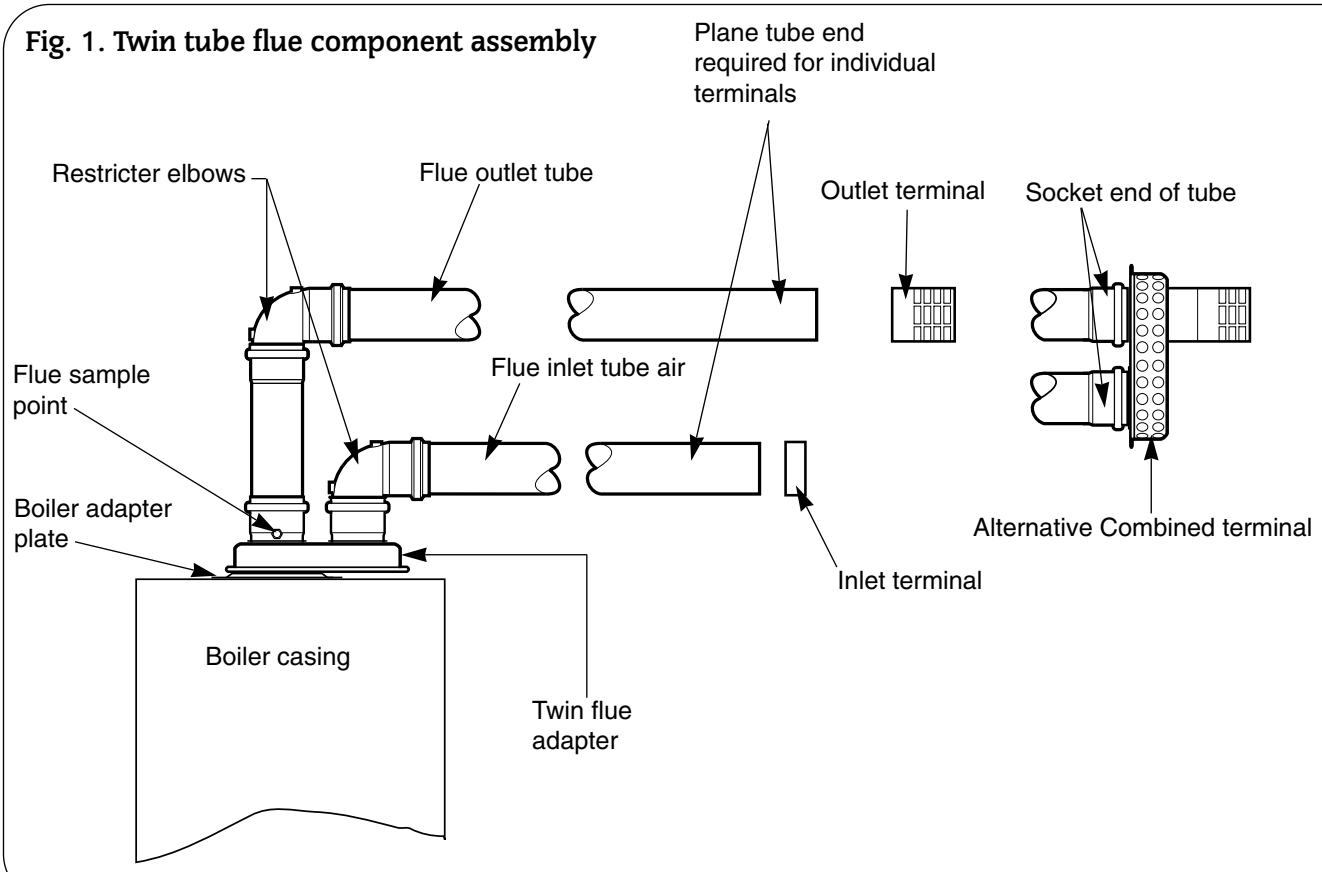

Table 3 Propane only

Flue type	Maximum flue length individual terminals	Maximum flue length combined terminal
Straight runs	4,000 mm	4,000 mm
Up to 1x 90° bends* in each tube run	4,000 mm	4,000 mm
Up to 2 x 45° bends* in each tube run	4,000 mm	4,000 mm

Two elbows are supplied with the twin adapter kit, both are fitted with a restrictor disk. And must be either directly connected to the twin tube adapter on the top of the boiler, or using a extension tube may be spaced up to 500 mm vertically above the adapter. If the length of the vertical extension tube is greater than 170mm it must be subtracted from total flue length of the flue system (see fig 3)

This is the only section of the flue that is allowed to be vertical.

Where the flue is to be terminated with individually terminals. They must be either at least 300 mm away from each other on a flat wall or with the flue outlet terminal extending greater than 300mm past the inlet terminal up to a maximum of 1,000 mm. Allowing use in applications such as under balconies. See fig 3 Care must be taken to ensure the installation constitutes no hazard to the public and conforms to the requirements of BS 5440 and the relevant building regulations.

Two wall finishing plates are supplied with both the individual and combined terminal kits, if they are to be used the tube centres must be 120 mm apart when passing through a wall.

Where the combined terminal is to be used the tube centres must be 120 mm apart, parallel and of equal length at terminal connection.

Fig. 2. Plan view of boiler

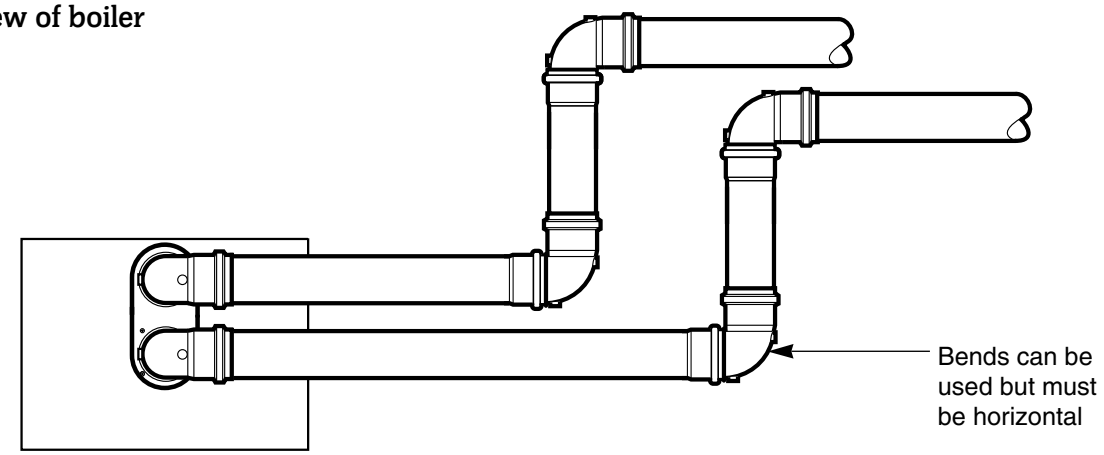

Fig. 3. Twin flue with indivdual terminals

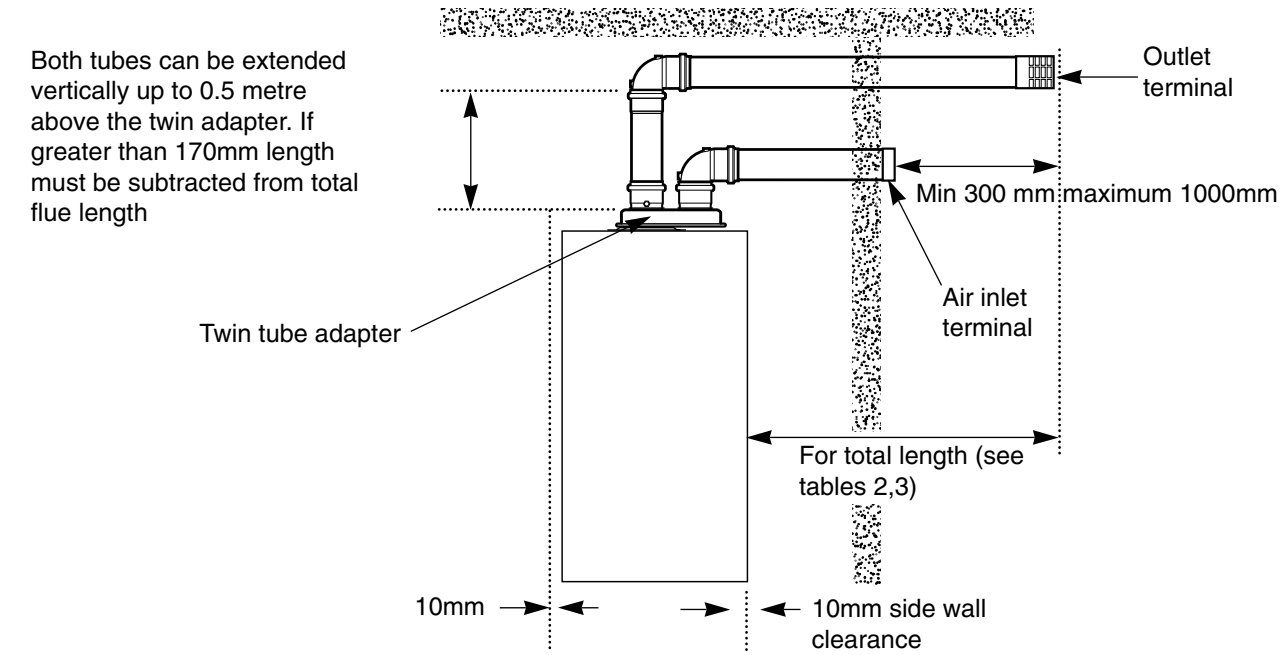

Fig. 4.

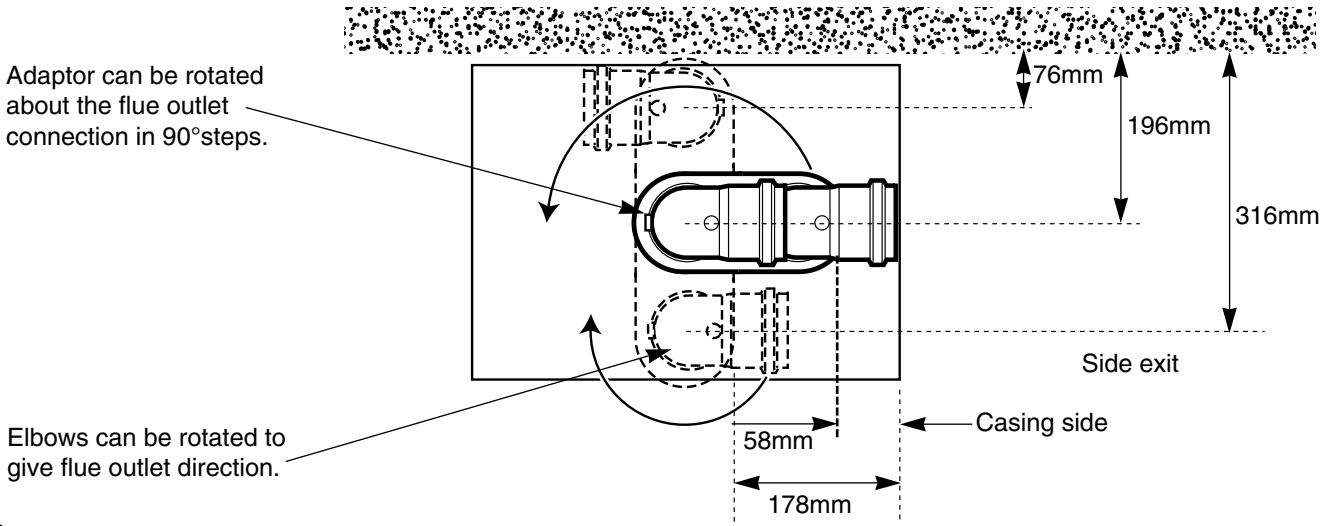

Fig. 5.

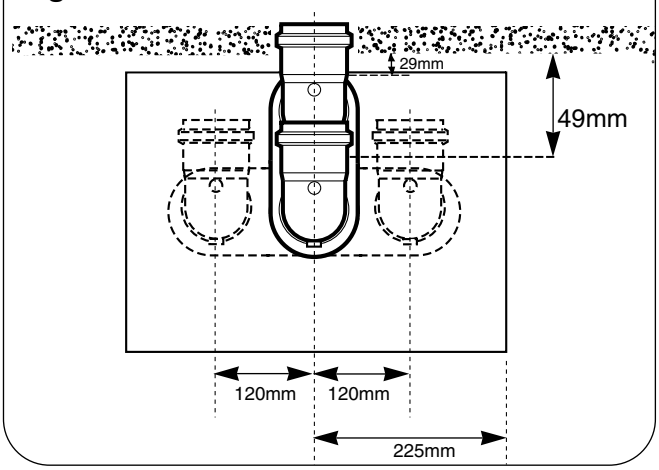

Twin tube adaptor positioning

It is possible to fit the adapter in 90° steps about the flue outlet of the boiler (see figs 4,5). Tubes can be orientated as figs 2 with tubes ether side by side or with outlet tube above the air inlet tube as fig 3.

Calculating tube lengths

The following should taken in to consideration when calculating tube runs:

Although tubes are 1000 mm in length 50 mm is used for engagement giving an effective length of 950 mm, and should be allowed for when calculating the number of tubes required.

Where tubes are to be cut, 50mm of engagement must be allowed for.

Unless otherwise stated the always measure from the socket end of the tube discarding the plain end of the tube.

Where installed bends add 71mm to the length of tube they are connected to in both directions see fig 6.
Where individual terminals are to be used the flue must finish in a plane tube (not socket end), 30mm of engagement is required by the tube into the terminal.

Where the combined terminal is to be used the flue must finish with the socket ends of the tube.

If tubes are to be run one above the other as in figs 1,2 an extension tube will be required for the products tube.

Terminal guards

If the terminal is sited at less than 2 metres above the ground or walkway a terminal guard must be fitted.

Tube runs

Tube runs must be horizontal, or with a 1°drop along it's length and supported on each tube at equal lengths using clamps supplied.

These clamps must be tightened fully to ensure that there is no accidental separation of flue components from each other.

Where product tubes pass through a combustible internal wall then a sleeve should be constructed of metal or equivalent non combustible material with a 25mm gap and should be packed with a non combustible thermal insulation.

Where product tubes pass near combustible surface a 25mm or greater clearance must be retained. Greater protection can be offered if required by either the surface or the tube being insulated with a non combustible thermal insulation .

Where the product tubes is to pass through a public area protection should be offered to prevent tubes being accidentally touched.

Where tubes run externally for more than 200 mm they should be insulated with a suitable material & protected from accidental damage or vandalism.

Where 90°and 45°bends are to be used these must be horizontal, vertical runs are not permitted.

Fig. 6. Combined terminal orientation

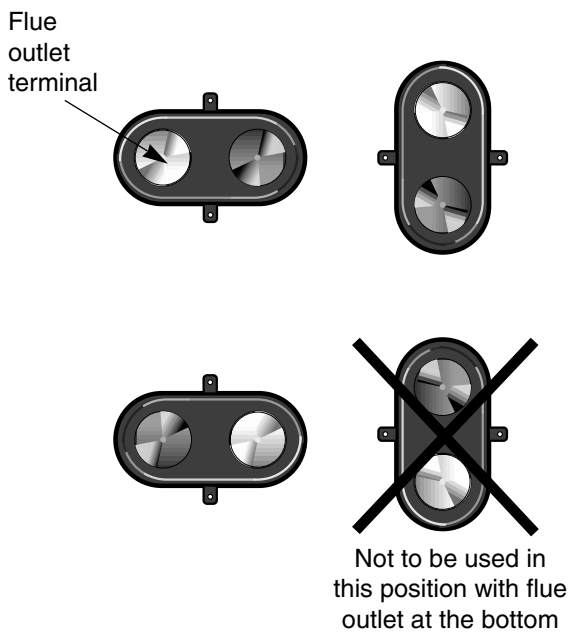

Fig. 7. Allowance for bends

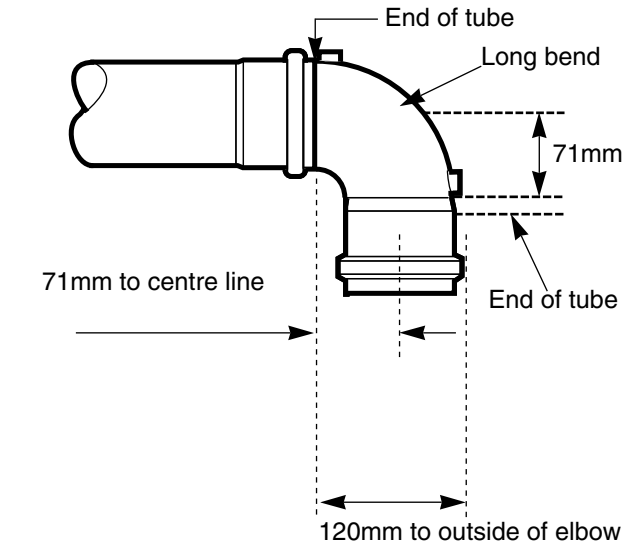

Installation

Read main boiler instructions in conjunction with this section.

See fig.1 for assembly and component drawing.

1. Fit adapter plate to boiler using the 4 M5 screws supplied with the kit ensuring that the adapter is orientated correctly, the label indicating "front" must be pointing to the front of the boiler (fig.8).

2. Fit the twin tube adapter to boiler adapter plate using the 4 self-tapping screws in the accessory pack (fig.9).

3. Measure exactly the required lengths of tubes, where bends are to be used allow for an increase in length of 71mm, see fig.7.

Fig.8.

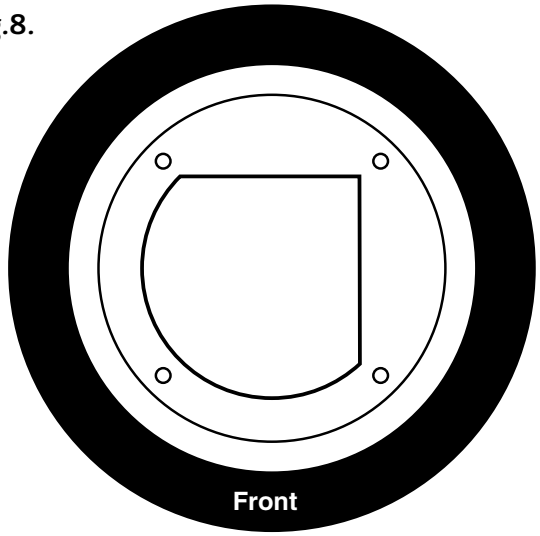

Fig.9.

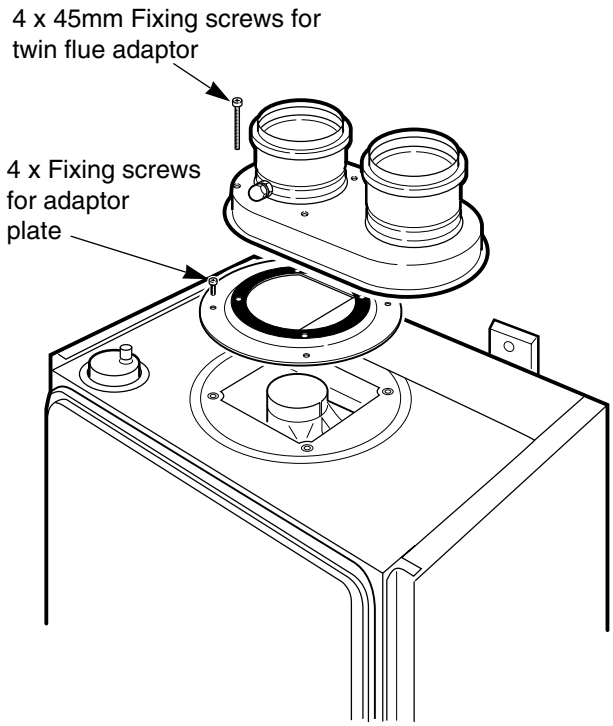

4. When cutting the tubes measure from the socket end (unless otherwise stated), allowing 50 mm on the plain end of the tube for engagement into the mating component. Ensure that ends of tube are cut squarely, undamaged, and de-burred with no sharp edges that could damage the seal.

5. **Important!** Before assembling ensure that the inside of the tube is clear of debris or blockage, the seal is correctly fitted into the socket end of the tube, when assembling care must be taken to not to damage the seals.

6. Support each tube with the brackets supplied. Ensure that the final system is level or with a 1°drop along it's length and that brackets are fully tightened to give a rigid assembly with each tube fully engaged in to its mating component. See fig.10. Continue with either individual or combined terminal assembly.

Individual terminals

7. If the wall plate contained in the terminal kit is to be used ensure that tube centres are at 120mm ether vertically or horizontally. Fit plate over the plain end of the tubes and use the plate as a template for fixing holes.

8. Drill the holes and fix the plate to wall with the 6 screws and plugs provided.

9. Both inlet and outlet terminals fit over the plane tube measure from end require 30mm of engagement over tube

10. Using the terminals as a template mark through the 2-hole positions on to the flue tube and drill two 2.5mm diameter holes in the tube and fix with the screws provided in terminal kit.

11. Retain terminal using the 2 screws supplied in kit.

12. Repeat process with the other terminal.

Flue tube support brackets

One support brackets is supplied with every 1 metre extension tube

1. Mark and drill a 10mm hole in the supporting surface at the required position.

2. Place the plastic wall plug supplied into hole and screw stud into plug using spanner flats on the stud (see fig 10).

3. Fit the locking nut, then top half of the bracket to stud. Ensure the bracket is adjusted to support the tube in the correct position and secure with the locking nut, fit the tube into it's mating component and using the two nuts and bolts provided and secure bottom half of bracket.

Fig.10. Flue tube support brackets

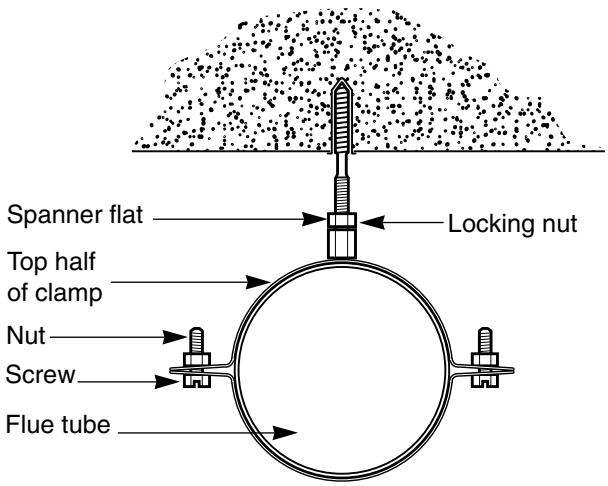

Combined terminal

Carry out installation procedure up to and including number 6 then continue below: -
Important. The two tubes to be connected to the terminal must be parallel, at 120mm centres when passing through the wall the terminal is to be mounted to.

7. Using wall plate mark positions of 2 holes where tubes are to pass through the wall

8. Cut or drill out two 100mm-diameter holes at 120mm centres on the wall that the flue is to pass through.
9. The flue tubes to be connected to the terminal must be assembled to the terminal before mounting to the wall. This requires two holes to be drilled in the socket end of the flue tube with the drill provided in the combined terminal kit. See figs 11.

Fig.11. End view of tube

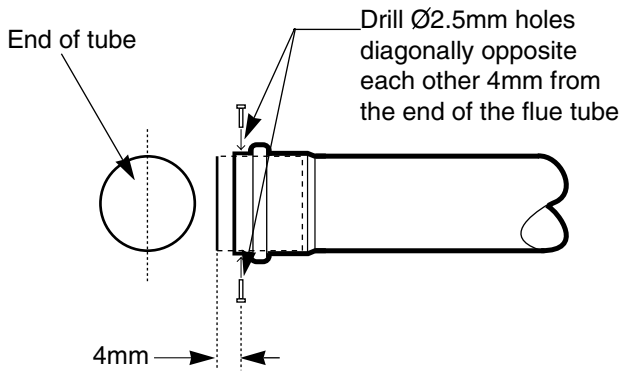

10. Assemble the black wall plate onto the terminal and slide the pre-drilled tubes onto the terminal connections so that the two holes in tube line up with the grove in the terminal connections.

11. Using the self tapping screws provided in the terminal kit secure the tubes to the terminal, the screws are not intended to pierce the terminal connection but grip into the groove, care should be taken not to over tighten the screws to prevent stripping, see fig 12.

Fig.12. Terminal tube assembly

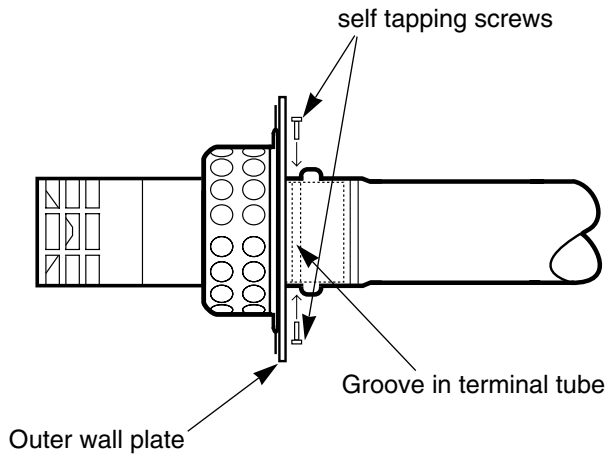

12. Fit terminal on to the external wall ensuring that tubes are not damaged during fitting. Mark terminal fixing holes onto the wall and drill 6 holes 6.5 mm diameter 35mm deep.

13. Fit internal wall plate and mark hole positions. Mark terminal fixing holes onto the wall and drill 6 holes 6.5 mm diameter 35mm deep.

14. Fix terminal with the screws provided.

15. Before final assembling flue ensure that both air and flue outlet tubes are clear of debris or any other obstruction.

Fig.13. Terminal final assembly

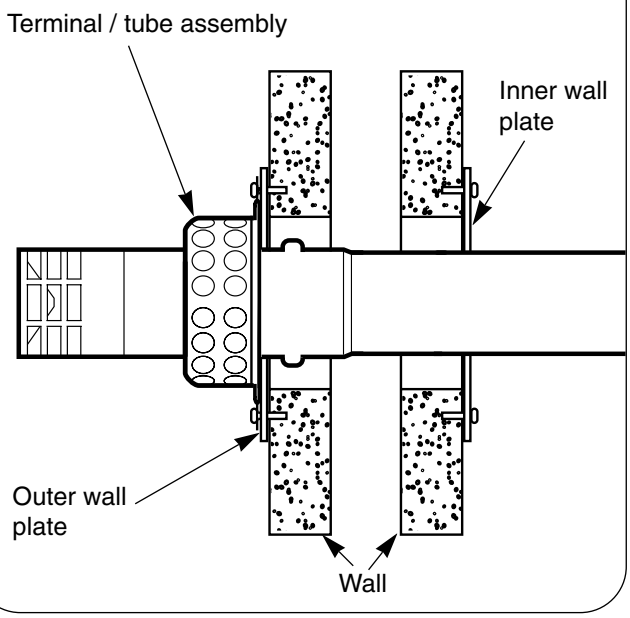

WORCESTER
Bosch Group

Worcester Heat Systems Limited, Cotswold Way, Warndon, Worcester WR4 9SW.
Telephone: (01905) 754624. Fax: (01905) 754619.
Technical Helpline (0990) 266241.

8 716 156 979a 11/99

WORCESTER

Bosch Group

CDi SERIES 400 DAY TIMER

ANNUAL SERVICE INTERVAL INSTRUCTIONS

TO BE RETAINED ONLY BY THE INSTALLER / SERVICE ENGINEER

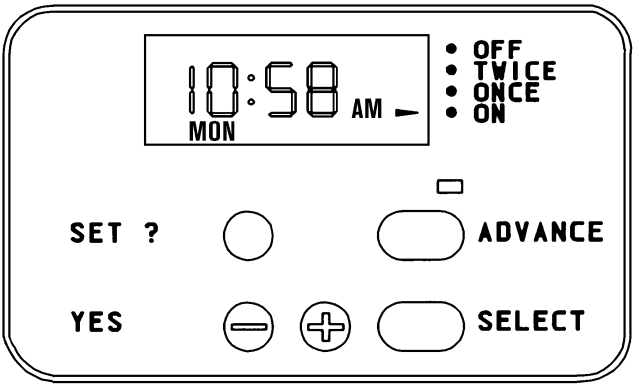

THESE INSTRUCTIONS SHOULD BE GIVEN TO (OR KEPT BY) THE PROVIDER OF ANNUAL SERVICING TO THE WORCESTER BOILER

GENERAL INFORMATION

This programmer will disable the central heating function after 400 days of electrical power applied to the boiler. This is reset by depressing a button on the rear of the programmer.

TO FIT AND OPERATE THE PROGRAMMER

Refer to the main fitting / operating instructions supplied with the unit (ZKLIT999).

TO RESET THE PROGRAMMER

1. Remove boiler front cover and lower facia to the service position.
2. At the rear of the programmer there are two exposed retaining clips. Release clips.
3. Lift facia to normal position and remove programmer from facia **but leave connector fitted to control board.**
4. With electrical power still applied to programmer, press reset button (see Fig. 1.) for at least 5 seconds.
5. Refit programmer and boiler front cover.

Fig. 1. Rear view of programmer

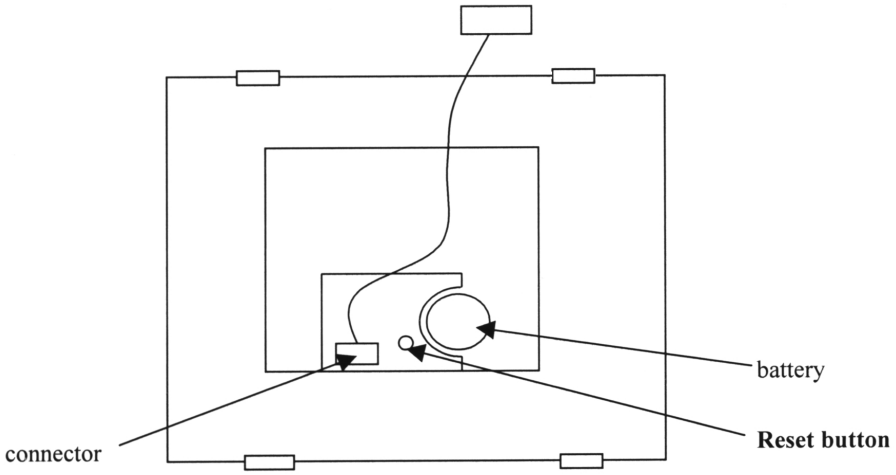

TO TEST IF THE PROGRAMMER HAS RESET (Refer to Fig. 2.)

1. Remove programmer from facia as decribed above **but leave connector fitted to control board.**
2. Apply power to boiler.
3. Set programmer to **'ONCE'** and push **'ADVANCE'** button so that programmer light **(A)** is off.
4. Set central heating temperature control on facia **(C)** to maximum and external controls (if any) to on/maximum.
5. Press programmer reset button for 3 seconds (not less than 1 second, not more than 5 seconds).
6. If counter is reset (counting to 400 days); facia central heating demand light **(B)** will be on for 10 seconds.
   If the counter is not reset (expired over 400 days); facia central heating demand light **(B)** will be on for 20 seconds.

Fig. 2. Front view of facia and programmer

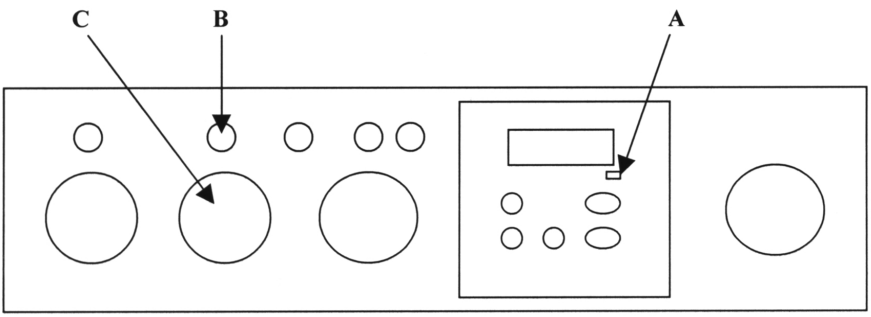

NOTE:
The 400 day counter is active when power is applied to the boiler and the programmer is connected to the control board. The counter will stop for any period power is not applied to the programmer.

Worcester Heat Systems Limited (Bosch Group), Cotswold Way, Warndon, Worcester WR4 9SW.
Telephone: 01905 754624. Fax: 01905 754619. Web site: www.worcester-bosch.co.uk

8 716 104 764a 01/02

6490014-1 Iss A

WORCESTER

Bosch Group

SINGLE-CHANNEL MECHANICAL TIMESWITCH FITTING & OPERATING INSTRUCTIONS

General information is given in the users instruction leaflet dispatched with the appliance and/or on the lighting instruction plate fitted on the appliance.

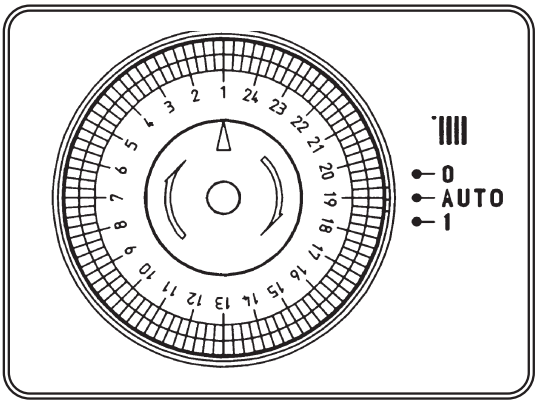

THESE INSTRUCTIONS APPLY IN THE U.K. ONLY

THESE INSTRUCTIONS ARE TO BE LEFT WITH THE USER OR AT THE APPLIANCE

Gas Safety (Installation and Use) Regulations 1984 : All gas appliances must be installed by a competent person, in accordance with the above regulations. Failure to install the appliance correctly could lead to prosecution. The manufacturers notes must not be taken, in any way, as overriding statutory obligations.
IMPORTANT: Read these instructions carefully in order to get the best from your appliance.
WARNING: This appliance must be earthed and protected by a 3A fuse if a 13A plug is used, or, if any other type of plug is used, by a 5A fuse either in the plug or adaptor or at the distribution board.

TIMESWITCH

24 hour single channel mechanical timeswitch. User maintenance is not possible.
CONTROL
Any number of ON and OFF periods can be chosen within a 24 hour period.
There will be at least a 15 minute separation between the operations.

TO FIT THE TIMESWITCH

Switch off the power supply to the appliance before starting work.
Unscrew the three screws securing the lower facia panel and remove the panel.
Lower the control panel as described in the instruction book.
Remove the facia cover plate by releasing the clips at the rear right-hand side and withdraw it from the front.
Feed the electrical lead from the timeswitch through the facia to exit underneath it, and fit the timeswitch by hooking the top two lugs up into the facia slots and then push the bottom two clips until they snap into position.
CDi BOILER: Connect the leads to the room/frost thermostat connection, after removing the link, at the left-hand side of the control panel (see diagram). Check that the leads are properly engaged in the connector block and that no loose wires are showing.
i BOILER: Connect the leads to the clock connection, after removing the link, at the left-hand side of the control panel (see diagram). Check that the leads are properly engaged in the connector block and that no loose wires are showing.
Note: CDi Boilers only.
If the timeswitch is being fitted to an appliance which already has a room thermostat fitted to it then the thermostat connections must be altered. The unswitched live to the room thermostat must be moved from connection Ls to ST8 with the timeswitch grey lead. (See Wiring Diagram).
Using the P-clip supplied secure the lead to the facia (the P-clip can be screwed to the facia using one of the holes in the facia for securing the cable clamp which would be used if an external programmer was fitted).
Refit the control panel and the lower panel before switching on the power supply.

CDi WIRING DIAGRAMS

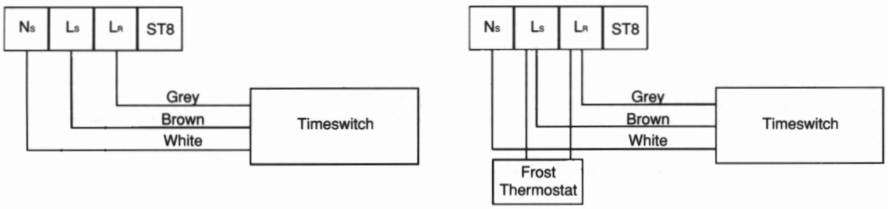

i WIRING DIAGRAM

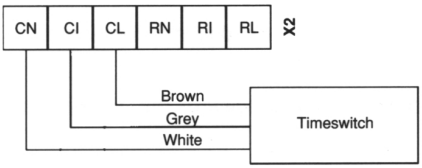

TO REPLACE TIMESWITCH – CDi

Follow the preceding instructions.

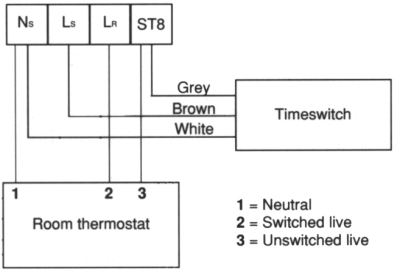

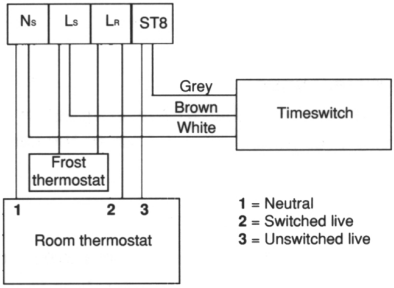

TO SET THE TIMESWITCH

The timeswitch controls the operation of the central heating circuit. The domestic hot water is permanently available upon demand and will take priority over the supply of heat to the system during the demand.

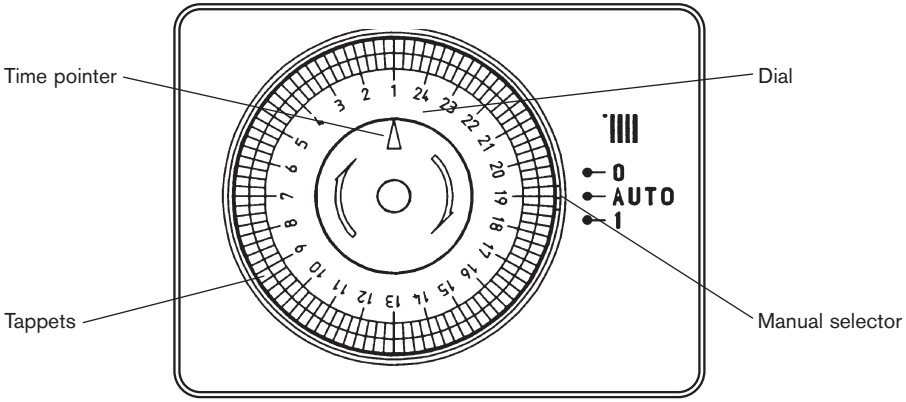

Check that the gas supply to the appliance is OFF and that the room thermostat, if fitted, is at minimum to prevent the accidental operation of the appliance during the initial setting of the timeswitch. It is not necessary to do this when making adjustments to the timeswitch at a later date. Check that all taps and showers are shut.

Switch on the power supply.

TO SET THE CLOCK
Turn the dial clockwise until the correct time of day is at the pointer.

TO SET THE SWITCH
To set the ON periods push the grey tappets towards the centre from the start of the period until the end of each period.

OPERATIONAL NOTES
Switching:
The switching options for the central heating are

OFF	Off all the time
AUTO	On and Off as selected by the adjustment of the tappets
ON	On all the time.

Hot Water Supply:
Hot water is available whenever a tap or shower is turned on. The supply of hot water takes priority over the delivery of heat to the central heating system for the period that the hot water is required.

Temperature Control:
The **Central Heating** water temperature is controlled by the centre knob on the facia.
The **Domestic Hot Water** temperature is controlled by the right-hand knob on the facia up to a pre-set maximum. (CDi only).

TO LIGHT AND STOP THE APPLIANCE

Refer to the User operating instruction leaflet or the lighting instruction plate on the appliance.

WORCESTER
Bosch Group

WORCESTER HEAT SYSTEMS LTD (**Bosch Group**) Cotswold Way, Warndon, Worcester WR4 9SW.
Tel: 01905 754624 Fax: 01905 754619
www.worcester-bosch.co.uk

PUBLICATION ZKLIT998 – ISSUE E SEPTEMBER 2001

WORCESTER

Bosch Group

VERTICAL BALANCED FLUE SYSTEM

INSTALLATION INSTRUCTIONS

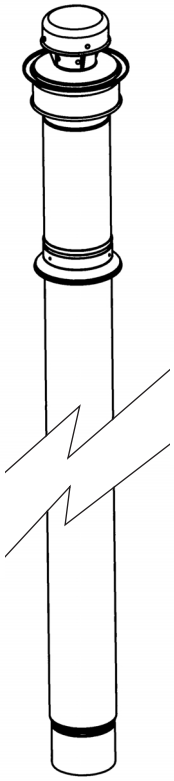

ROOM SEALED NON-CONDENSING COMBINATION/SYSTEM BOILERS AND WATER HEATERS

24i	47 311 37/38	9/14 CBi	41 311 50/51
28i	47 311 54	14/19 CBi	41 311 52/53
25Si	47 311 49/50	19/24 CBi	41 311 54/55
28Si	47 311 51/52	WR325	52 311 02
C1	47 311 51	WH1	52 311 03
24CDi	47 311 30/31	24SiII	47 311 65/66
28CDi	47 311 34/35	28SiII	47 311 67/68
35CDiII	47 311 51/52		
15SBi	41 311 43/45		
24SBi	41 311 44/46		

IMPORTANT: THIS BOOKLET MUST BE READ FULLY IN CONJUNCTION WITH THE APPLIANCE INSTALLATION AND SERVICING INSTRUCTIONS

THESE INSTRUCTIONS APPLY IN THE UK ONLY

THESE INSTRUCTIONS ARE TO BE LEFT WITH THE USER OR AT THE GAS METER

1. Flue Terminal Position

The Flue System must be installed in accordance with BS 5440: Part 1 2000 where applicable.
When installed the minimum clearance between the terminal and any adjoining vertical walls or obstructions must be at least 500mm.
The terminal must not be installed within 600mm of an openable window, air vent or any other ventilation opening. See Fig. 1.
If the flue needs to go through a wall next to the appliance adequate space must be allowed for the flue bend to be fitted.
When the flue is taken through the ceiling and into the roof space, or room above there must be a minimum air gap of 25mm between any part of the flue system and any combustion material.
Note: It is absolutely essential to ensure, that in practice, products of combustion discharging from the flue terminal cannot re-enter the building or any other adjacent building through ventilators, windows, doors, other sources of natural air infiltration, or forced ventilation/air conditioning. If this should occur, the appliance **MUST** be turned off immediately and the local Gas region called in to investigate.
The Flue System must be supported by brackets (not supplied) such that the weight of the flue system is not resting on the appliance flue connection.
The Flue System is suitable for installation in dwellings with pitched or flat roofs.
The minimum distance the Flue Terminal Assembly shall extend above the surface of the roof is 300mm. This dimension is measured from the outside surface of a flat roof or the highest point on a pitched roof to the underside of the air inlet flange on the terminal assembly. See Fig 2.

Fig. 1. Terminal Position

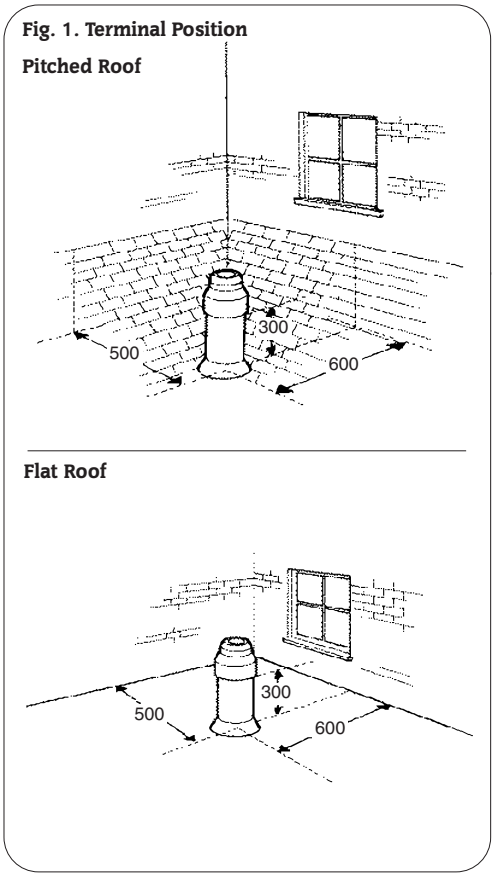

Fig. 2. Terminal Height

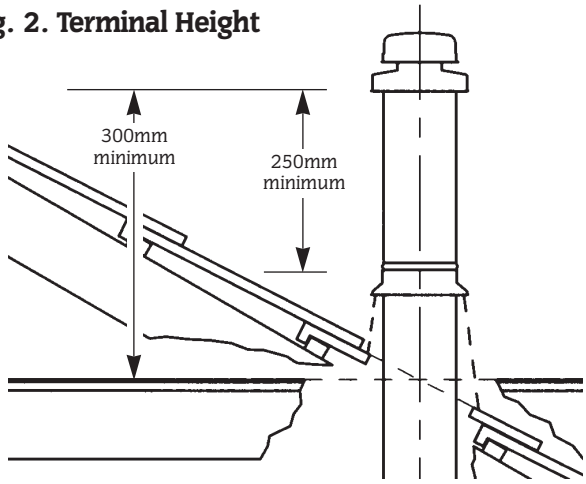

2. Vertical Balanced Flue Options

Important: All the Flue items referred to in this section are supplied as optional extras and should be purchased before the installation is started. The components should be checked against the parts and part numbers shown in Table 1.

Table. 1

Key No.	The Vertical Flue Kit consists of:-	Quantity	Part Number
1	Flue Terminal Assembly	1	7 716 191 079
2	Weather Sealing Collar	1	8 716 102 321
3	Flue Adaptor*	1	7 716 191 016
4	Fire Stop Spacer	2	8 716 100 281
5	Silicone Sealant	1	ZJADH 019
The following components MUST be ordered separately to suit the installation requirements			
6	Extension Flue Kit (750mm) including Flue Spacer	As req'd	7 716 191 006
7	90° Flue Bend	1	7 716 191 013
8	45° Flue Bend	1 pair	7 716 191 014

*NOTE: A Vertical Flue Adaptor is supplied in the Vertical Flue Kit, and the separate Part No. should therefore only be ordered in the case of a vertical exit from the boiler but horizontal termination

2.1. TERMINAL ASSEMBLY

The overall height of the terminal assembly is 1100mm.
Note. A minimum of 300mm shall extend above the surface of the roof. Refer to Fig. 2.

2.2. NOMINAL FLUE HEIGHT (NO OFFSET).

The maximum equivalent flue heights, excluding the flue terminal assembly are:

Table 2.

24i, 28i, 35CDi II	2.3m
WR325, WH1	2.6m
25Si, 28Si, C1	3.0m
15SBi, 24SBi, 24CDi, 80ic	4.0m
9/14, 14/19CBi	3.0m
19/24CBi	2.25
28CDi	3.5m
24Si II, 28Si II G20	4.0m
24Si II, 28Si II LPG	2.5m

2.3. FLUE WITH OFFSET USING TWO FLUE BENDS.

A flue offset can be provided using, 2 at 90° **(except for WH1 and WR325 RSF water heaters where 90° bends cannot be used)** or 2 at 45° bends.
When using an offset the overall length of the system is reduced.
A 90° bend is equivalent to 750mm of straight flue.
A 45° bend is equivalent to 375mm of straight flue.
Note: For the 24i, 28i and 35CDi II 2 x 90° bends allows a maximum straight length to not exceed 800mm or 1550mm for 2 x 45° bends.
When measuring between the centre-lines of flue ducts an allowance must be made for the relevant elbow. Refer to Fig. 3.

Fig. 3. Flue Offset

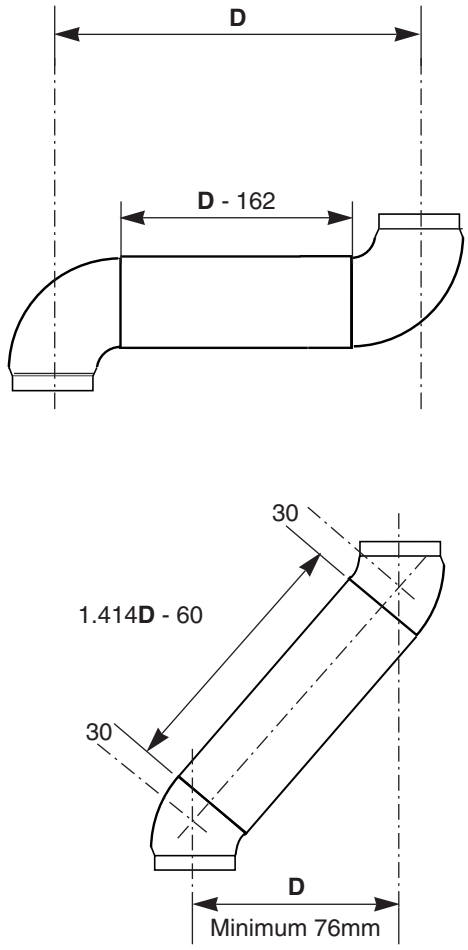

Fig. 4. Example of vertical flue assembly showing equivalent straight flue lengths

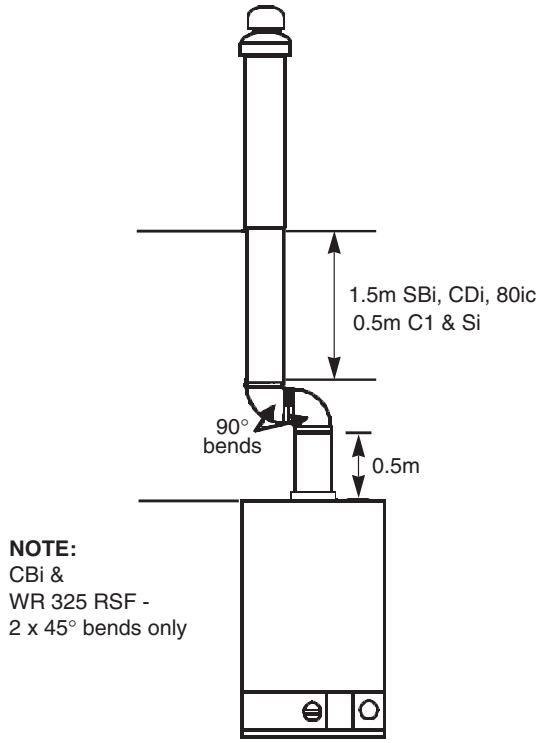

IMPORTANT: The flue terminal assembly must always be vertical at the roof outlet.

2.4. FLUE RESTRICTOR RINGS

The flue restrictor rings are in the appliance installation pack. Refer to the relevant Installation/service instructions for the method of fitting a restrictor ring.

Table. 3.

MODEL	EQUIVALENT FLUE LENGTHS UP TO 1M	EQUIVALENT FLUE LENGTHS 1M TO 4M
15SBi	79mm	NONE
24SBi	75mm	NONE
	EQUIVALENT FLUE LENGTHS UP TO 725MM	**EQUIVALENT FLUE LENGTHS 725MM TO 3M**
C1 & Si Series	79mm	NONE
	TERMINAL ASSEMBLY ONLY	**EQUIVALENT FLUE LENGTHS UPTO MAX LENGTH**
9/14CBi 14/19CBi	72mm	NONE
19/24CBi	79mm	NONE
WR325 RSF WH1	UP TO 2600mm	
	NONE	
35CDi II	UP TO 1m	1m-2.3m
	85	NONE
24CDi	NONE	
28CDi	NONE	
24Si II	With terminal section only use 78 mm restrictor	With longer flues no restrictor must be fitted
28Si II	With terminal section only use 82 mm restrictor	With longer flues no restrictor must be fitted

3. Preparation and General Notes

3.1. FLUE HEIGHT AND OFFSETS.

Determine the height of the flue system and if offsets are needed for the system to miss ceiling/roof joists and any other obstruction. Refer to Fig. 8.

3.2. INSTALLATION OF BOILER.

Refer to the relevant Installation and Servicing Instructions for the fitting of the wall-mounting frame assembly and the boiler.

Flush the system and, where required, the cold water supply before connecting the boiler.

3.3. FLUE KITS AND EXTENSIONS.

Remove all the packing from the ducts, flue terminal assembly and flue bends.

Important: The air duct, flue duct, flue bends and the terminal assembly are made from aluminium and must be handled appropriately.

3.4. FLUE ADAPTOR

For some options a flue adaptor must be fitted into the spigot on the top of the appliance casing. Refer to Fig. 9,10.

Fix the flue adaptor in position with the clamping screw ensuring that it is correctly located against the stop. Refer to Fig. 5.

If a flue bend **(WH1 and WR325 RSF may only use 45° bends)** is to be fitted directly to the top of the appliance then the flue adaptor is not required.

3.5. FLUE SUPPORT

Flue assembly lengths over 2000mm should be appropriately supported. Refer to Fig. 6 and Section 5.4.

3.6. FIRE STOP SPACER

The fire stop spacer is supplied with the flue kit. Refer to Fig. 7 and Section 5.3.

3.7. ROOF FLASHING

The roof flashing is not supplied. This is available, as a proprietary item (Selkirk or similar) from the building suppliers to suit a flue size of 125mm diameter and to suit pitched and flat roofs.

Fig. 5. Adaptor

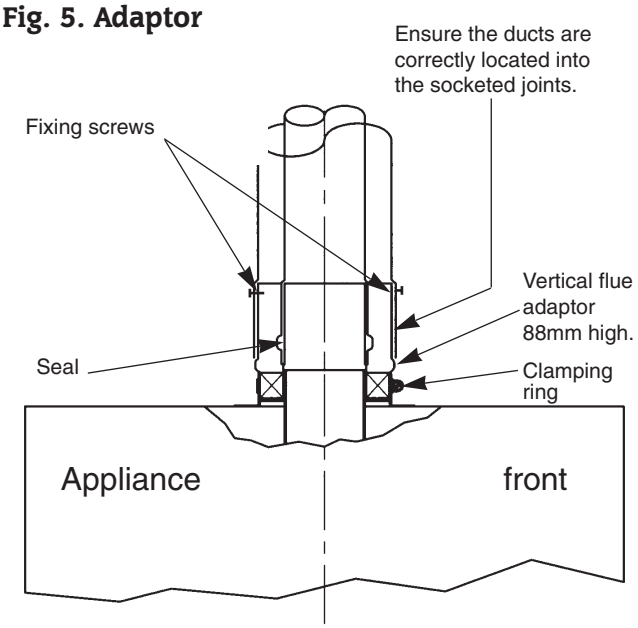

Fig. 6. Flue support - not supplied

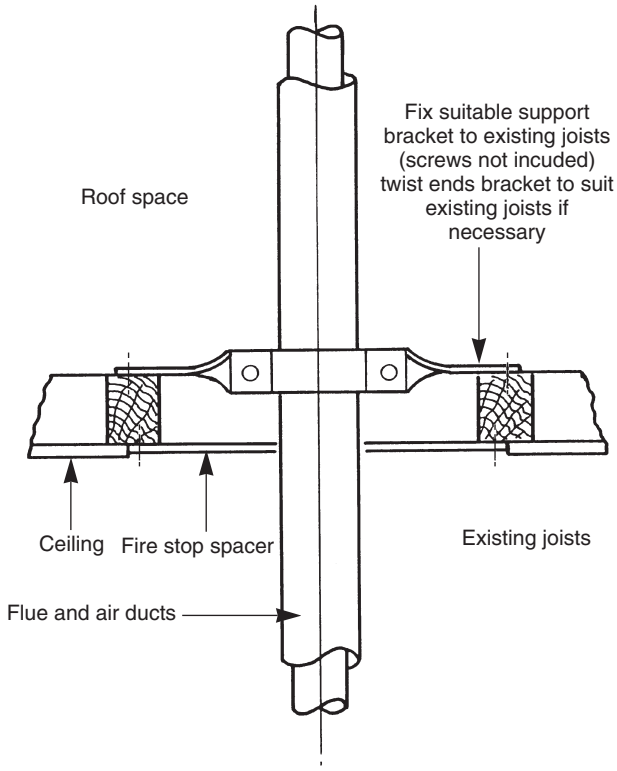

Fig. 7. Fire Stop Spacer

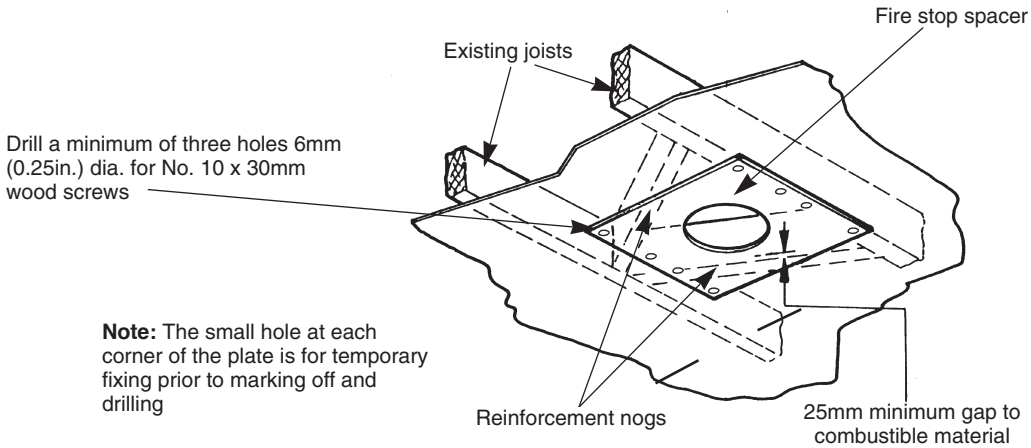

3.8. POSITIONING THE FLUE SYSTEM

It may be necessary to deviate from the following method of installation because of site conditions. However, joints must be sealed and fixed as described.

Align the centre of the flue spigot with the ceiling and mark the centre position. Refer to Fig. 8. Cut a hole 175mm (7in.) diameter in the ceiling.

Working within the roof space repeat the procedure and mark the centre position of the flue on the inside surface of the roof.

Mark a 125mm diameter circle on the inside surface to represent the outside diameter of the flue. Refer to Fig. 8.

This procedure is the same for flat and pitched roofs.

Important: The terminal assembly must extend at least 300mm above the surface or pitch of the roof. The distance may vary depending upon the type of roof and surrounding structures. In these instructions the distance is refered to as dimension 'F'. Refer to Fig. 9.10.11.12.

Fig. 8. Marking out the flue assembly position.

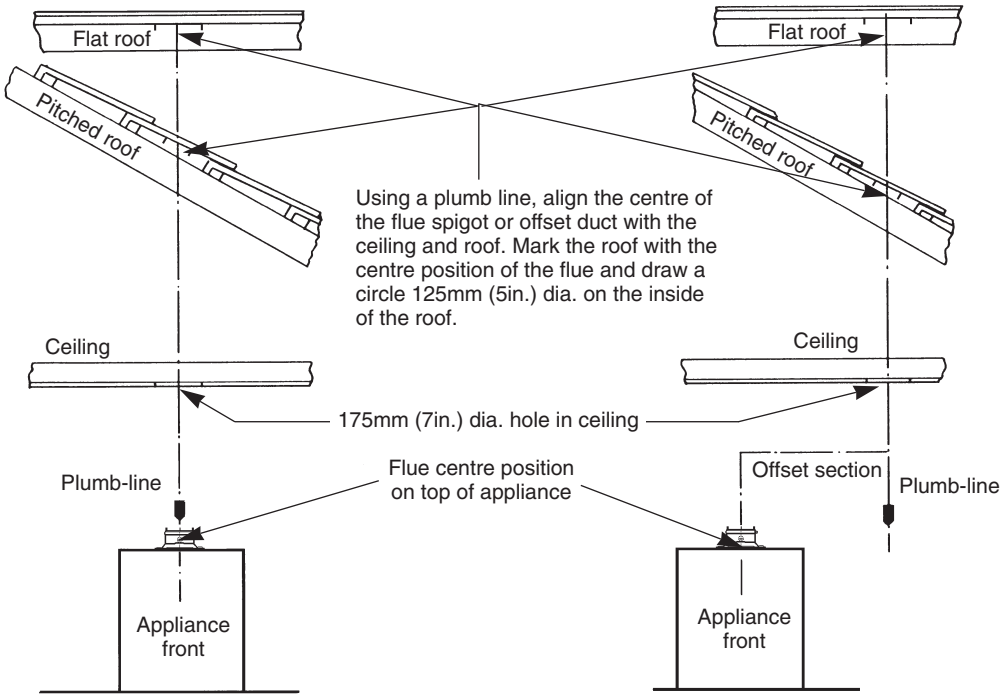

Vertical Flue System (no offset) **Vertical Flue System (with an offset)**

4. Measurement of Ducts

4.1 AIR AND FLUE DUCT LENGTHS - NO OFFSET

For a flat roof measure the distance from the appliance top panel to the outside edge of the hole diameter marked on the inside surface of the roof. This is dimension **'E¹'** Refer to Fig. 9.

For a pitched roof, measure the distance from the appliance top panel to the highest point of the hole diameter. This is dimension **'E²'**. Refer to Fig. 9.

Determine dimension **'F'** which must not be less than 300mm.

Duct Length = **H** — 92mm

Derivation: Dimension **G** = 1100 — **F**mm

Dimension **H** = **E** — **G**

Refer to 2.2 for maximum duct length.

Fig. 9. Vertical flue system (No offset)

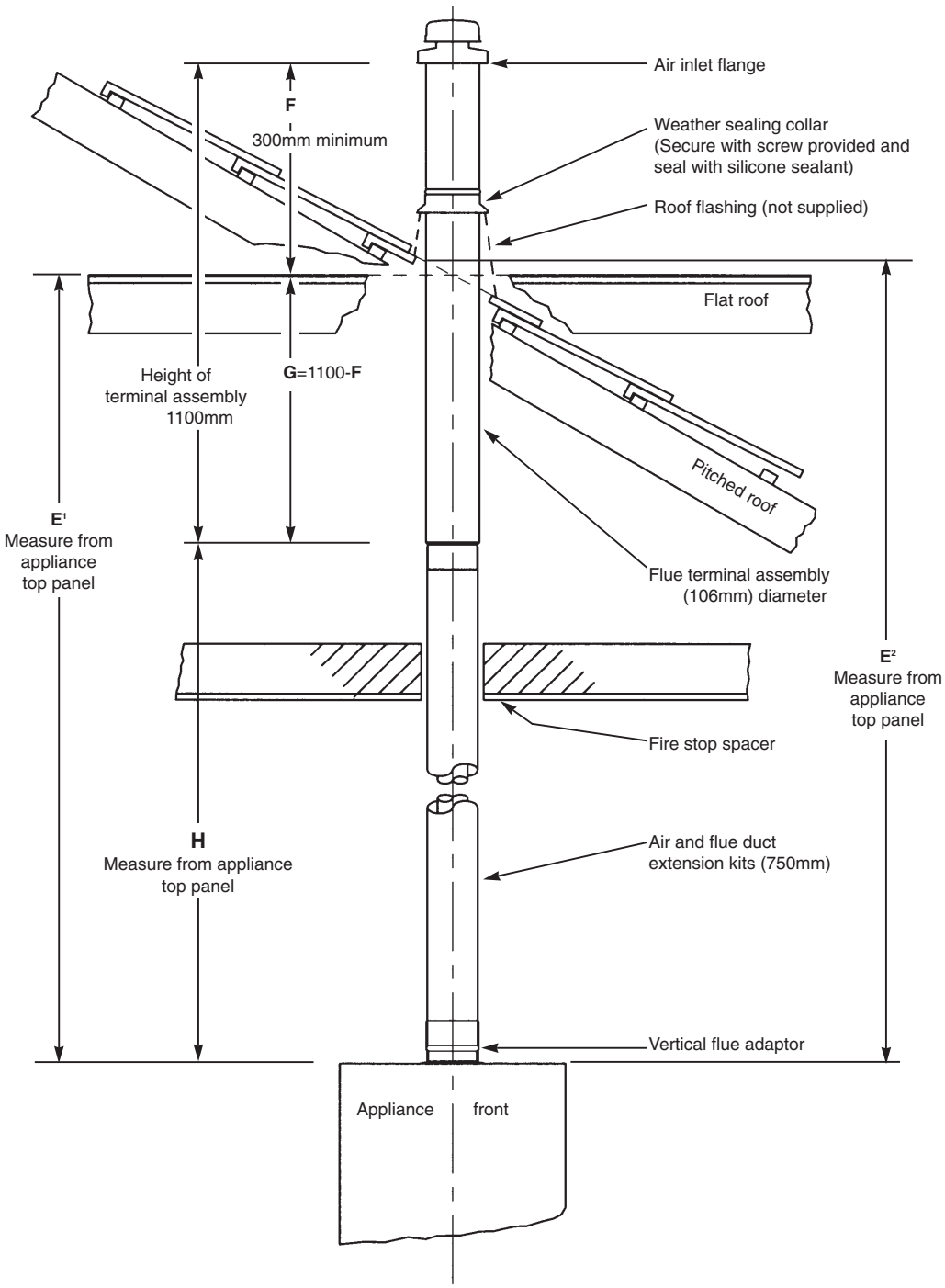

4.2 AIR AND FLUE DUCT LENGTHS - OFFSET WITH VERTICAL ADAPTER (90° or, where applicable, 45° bends)

1st Vertical Section:
Measure from the top of the flue spigot on the appliance to the centre-line of the horizontal section of the offset. Dimension **'J'**.
Refer to Fig. 10.
Duct Length = **J** — 173mm
Note: The air duct must not be less than 25mm.
If the elbow fits directly onto the spigot then **J** = 173mm.

Offset (Horizontal) Section:
Measure from the centre of the flue spigot on the appliance to the centre-line of the 2nd vertical section. Dimension **'D'**.
Refer to Fig. 10.
Duct Length = **D** — 162mm
Note: The dimension **D** must not be less than 210mm.

2nd Vertical Section:
Measure the distance from centre-line of the horizontal offset to the outside edge of the hole diameter marked on the inside surface of the roof. Dimension **'K'**. Refer to Fig. 7.
Note: Dimension **K**, for a pitched roof, must go to the highest point of the hole diameter.
Determine dimension **'F'**. Refer to Fig.1 and 7 for the limiting figure.
Duct Length = **L** — 81mm
Derivation: Dimension **G** = 1100 — **F**mm
Dimension **L** = **K** — **G**
Note: The air duct must not be less than 100mm.

Fig. 10. Vertical flue system offset with vertical adaptor (Not to be used with WH1 and WR325 Water Heaters)

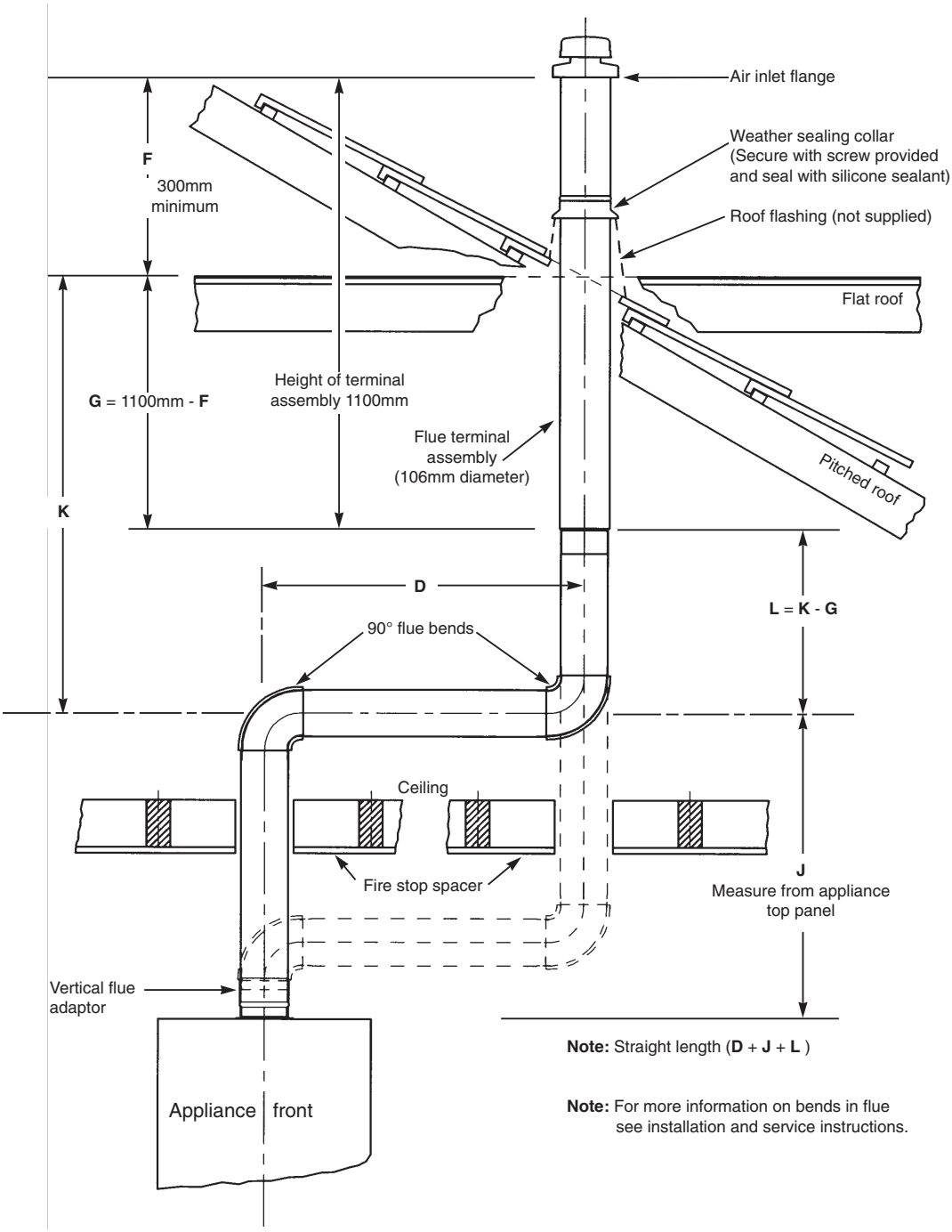

4.3 AIR AND FLUE DUCT LENGTHS - OFFSET WITHOUT VERTICAL ADAPTER (90° or, where applicable, 45° bends)

Measure the distance from the centre of the flue spigot on top of the appliance to the centre line of the vertical sections. Dimension **D.** Refer to Fig. 11,12.

Duct Length: 90° bends = **D** — 162mm
45° bends = (1.414 x **D**) — 60mm

Note: D must not be less than 210mm with 90° bends or 76mm with 45° bends.

Minimum length of air/flue duct is 48mm.

When 45° bends are used the equivalent overall height of that section is D + 60mm.

Vertical Section:

Measure the distance from the centre-line of the horizontal offset to the outside edge of the hole diameter marked on the inside surface of the roof. Dimension **'K'**. Refer to Fig. 6 and 7.

Note: Dimension K For a pitched roof must go to the highest point of the hole diameter.

Determine dimension **'F'** which must not be less than 300mm.

Duct Length = **L** — 81mm
Dimension **G** = 1100 — **F** mm
Dimension **L** = **K** — **G**

Fig. 11. Vertical flue system offset without vertical adaptor (Not to be used with WH1 Boilers and WR325 Water Heaters)

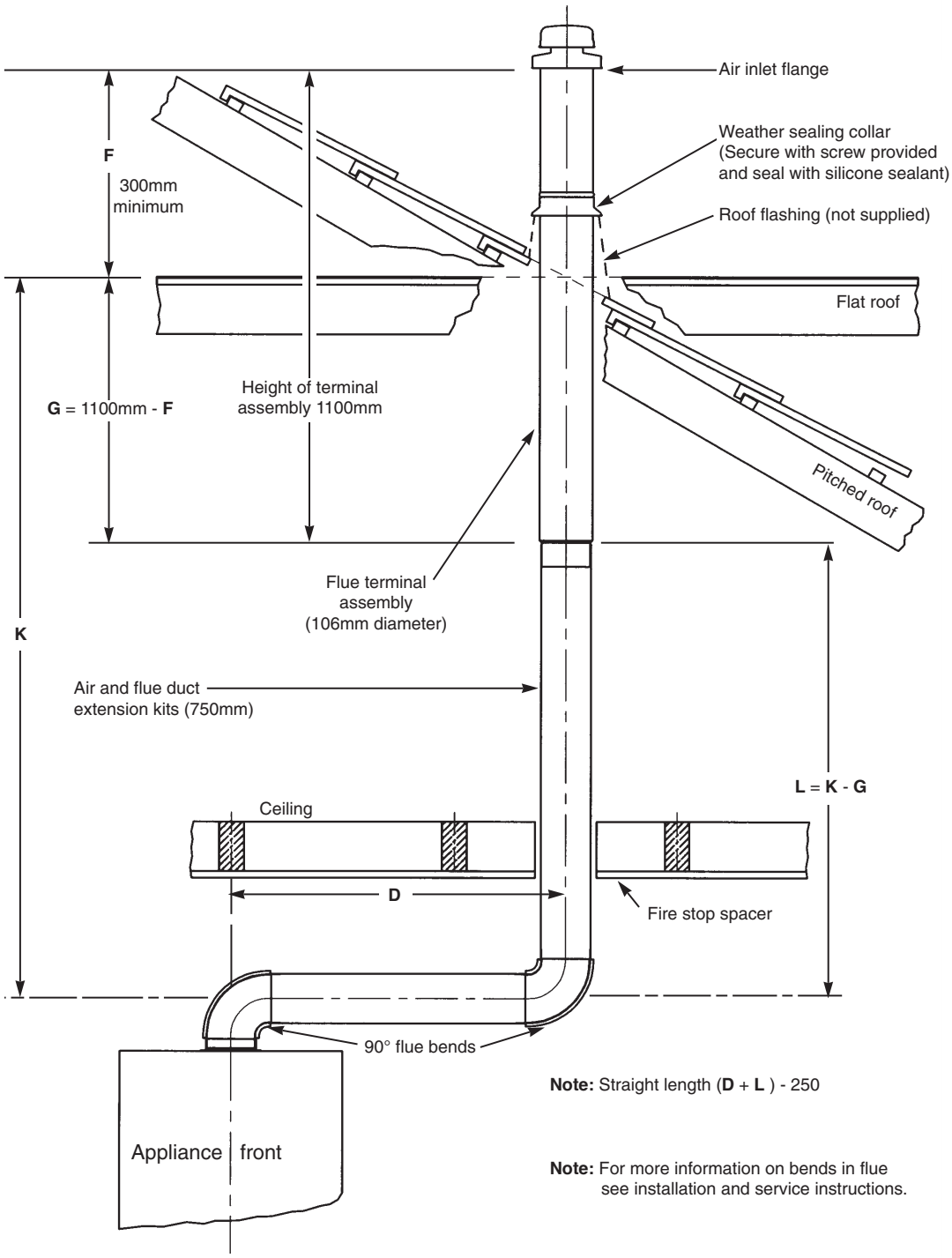

Note: Straight length (**D** + **L**) - 250

Note: For more information on bends in flue see installation and service instructions.

Fig. 12. Vertical flue system (offset with 45° flue bends)

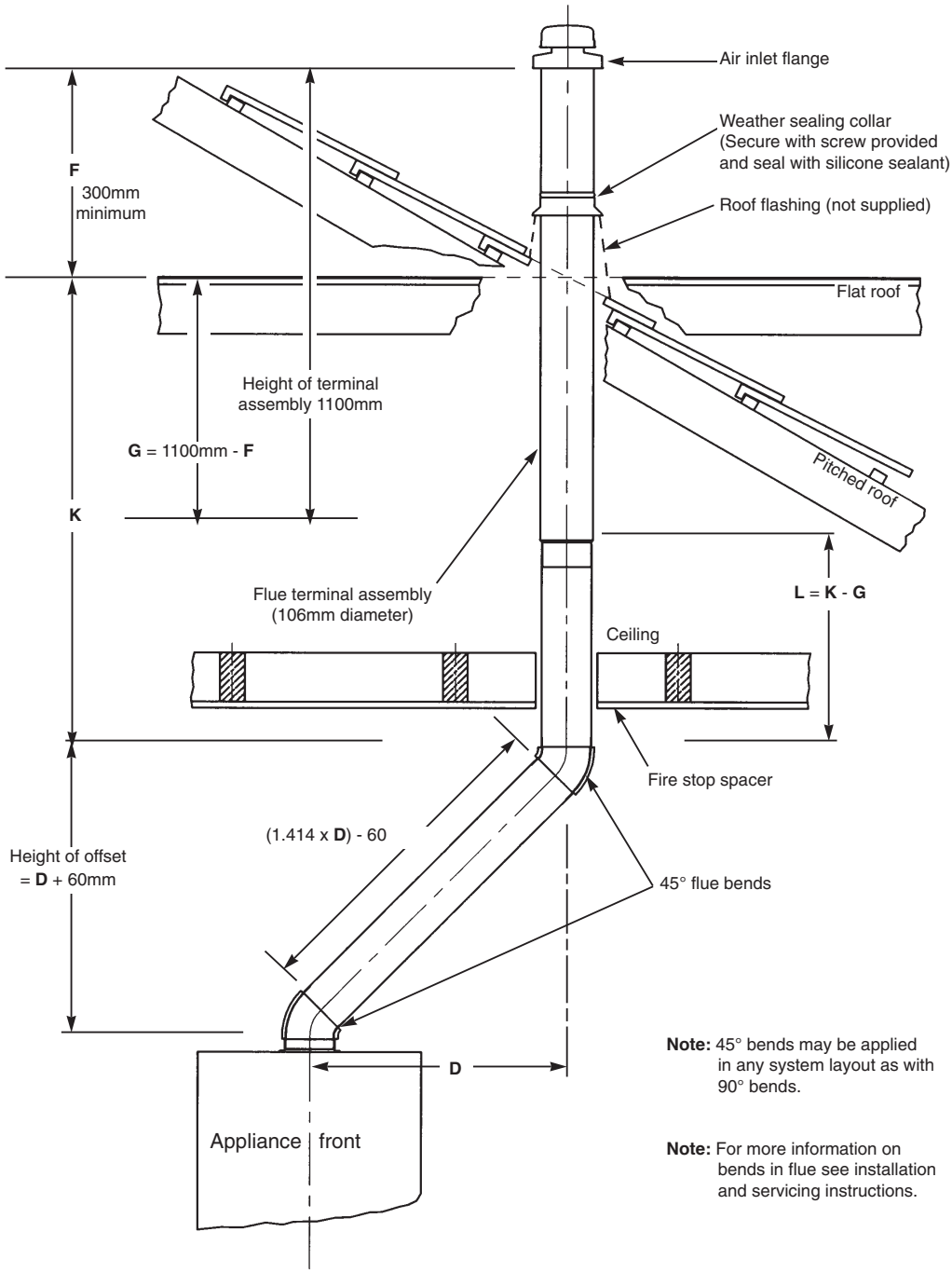

5. Installation of Flue

5.1 It may be necessary to deviate from the following method of installation because of site conditions, however, the joints must be sealed and fixed as described.

5.2 CUT DUCTS

When measurements have been made and **checked**, cut the air and flue ducts to length ensuring that the cuts are square and free from burrs.

All dimensions refer to straight lengths and do not include the expanded ends. Do not cut the expanded ends unless specifically instructed to do so.

5.3 POSITION OF THE FIRE STOP SPACER ASSEMBLY

Fit the fire stop spacer centrally over the hole in the ceiling. Ensure the hole aligns with the flue spigot on top of the appliance casing.

Mark the four fixing hole positions in each half for No.10 x 30mm wood screws (not supplied) and fix either into the existing joists or into reinforcement nogs. Alternatively, the plate may be fixed to the ceiling using plasterboard toggle screws. Refer to Fig. 7.

5.4 POSITION OF THE FLUE DUCT SUPPORT BRACKET

From inside the roof space fit the support centrally over the hole in the ceiling. Ensure the hole aligns with the fire stop spacer and flue spigot on top of the appliance casing.

Mark and fix into position as previously described for the fire stop spacer. Refer to Fig. 6.

Remove the fire stop spacer and support bracket until the flue is assembled.

5.5 ASSEMBLY OF DUCTS

5.5.1 AIR DUCTS

Check the assembled length of the ducts. Drill two holes through the pilot holes in the expanded end of the air duct and fix the ducts together with the screws provided.

5.5.2 FLUE DUCTS

Fix the flue ducts together with screws provided ensuring that any extension ducts have the seals fitted. Refer to Fig. 8.

The 750mm extension kits come complete with one flue spacer. These must be fitted at about half distance, before the ducts are finally assembled.

Assemble the flue duct into the air duct.

5.6 FITTING FLUE AND AIR DUCTS ONTO AN ELBOW AT THE APPLIANCE

Fit the flue duct to the elbow ensuring that it is fully against the stop.

Drill two holes through the duct into the elbow. Separate and apply a smear of silicone sealant and fix with screws provided. Fit the air duct over the elbow entry and repeat the above process.

5.7 PREPARE THE ROOF

Remove sufficient roof tiles, or if a flat roof, cut a hole approximately 175mm diameter for the flue terminal assembly.

5.8 FIX THE FLUE SYSTEM ASSEMBLY TO THE APPLIANCE

From inside the building, assemble the flue system starting at the appliance. refer to Fig. 6, 8, 9 and 10.

Align the flue assembly or the first section of flue with the flue adapter fitted on top of the appliance casing. Drill two holes through the air duct and flue adapter and fix with the screws provided.

If an elbow is fitted straight onto the boiler then locate the elbow against the stop on the spigot on the boiler and fix with the clamp. Refer to Fig. 8, 9 and 10.

Note: All ducts must be truly horizontal or vertical unless the 45° elbows are being used.

Check at each stage of the system assembly that each section is properly aligned.

Each air and flue duct joint must be sealed and fixed. Each air and flue duct connection to an elbow must be sealed with silicone sealant and fixed with the screws provided.

Support any sections of the system until they are permanetely fixed into place using suitable support brackets.

Fig. 13. Typical duct assembly.

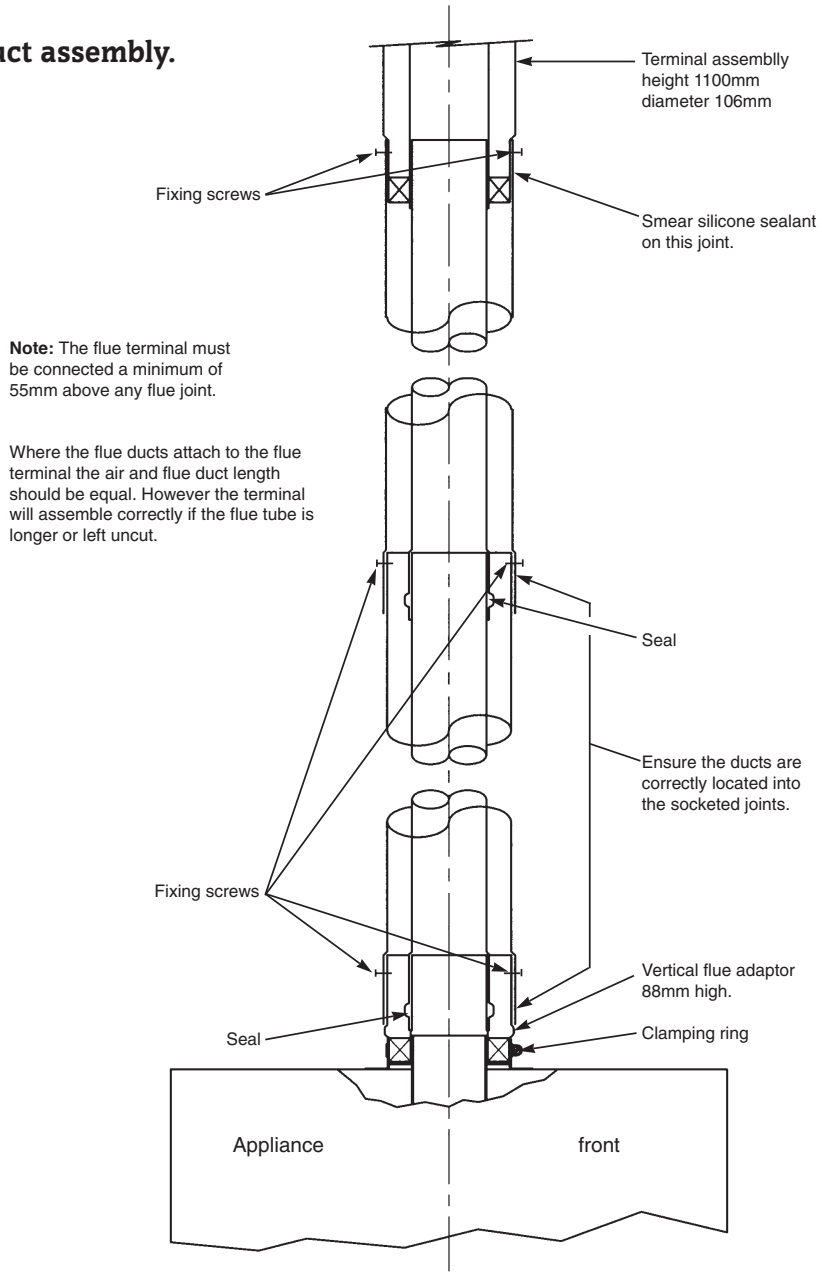

Important: Do not forget to fix the fire stop spacer as the assembly of the system proceeds.

5.9 FIX THE FLUE TERMINAL ASSEMBLY

Fit the roof flashing loosely to the roof.

From outside, pass the terminal assembly through the roof flashing.

From inside the roof space align the assembly with the air and flue ducts. If required, loosely fit the support bracket ensuring that the assembly is located correctly. Refer to Fig. 6.

Drill two holes through the holes in the air duct. Separate the assembly and apply silicone sealant to the outside of the air duct.

Re-connect the assembly and fix with the screws provided.

Note: The sealant and screws are not required for the flue duct. Refer to Fig. 13.

5.10 SEAL THE TERMINAL ASSEMBLY TO THE ROOF

From outside the building make good the roof structure and ensure the roof is weather sealed by fixing the roof flashing.

Apply sealant around the air duct at the top of the flashing.

Lower the weather-sealing collar over the roof flashing and tighten the self tapping screws provided and apply sealant around the top edge of the weather sealing collar.

Refer to Fig. 9, 10, 11,12.

WORCESTER

Bosch Group

Worcester Heat Systems Limited, Cotswold Way, Warndon, Worcester WR4 9SW.
Telephone: (01905) 754624. Fax: (01905) 754619.
Technical Helpline 08705 266241.
www.worcester-bosch.co.uk

PUBLICATION 8 716 145 030e 07/02

WORCESTER

CONVERSION INSTRUCTIONS FOR 24CDi OF, 24CDi RSF, 28CDi RSF, 26CDi XTRA & 35CDi II RSF Combi

THESE INSTRUCTIONS SHOULD BE USED IN CONJUNCTION WITH THE MAIN INSTALLATION INSTRUCTIONS WHEN CONVERTING APPLIANCES FROM LPG TO NATURAL GAS

ONLY COMPONENTS SUPPLIED BY WORCESTER HEAT SYSTEMS SHOULD BE USED

ONLY COMPETENT PERSONNEL SHOULD ATTEMPT THE CONVERSION

1. Ensure the gas service cock is turned **OFF** and the electrical supply is **ISOLATED**.
2. Refer to the Servicing Instructions to remove the cabinet front panel and inner casing.
3. Follow the dismantling instructions to remove the burner. Refer to Installation and Service Instructions Section: Inspection and Servicing.
4. Remove the injector and replace with the relevant injector from the kit. Refer to Installation and Service Instructions Section: Inspection and Servicing.
5. Remove the nut, end cap and bracket at the opposite end of the burner and remove the gauze.
6. Refit the end cap ensuring that the support bracket is in the correct orientation.
7. Remove the gas valve and replace with the gas valve supplied in the kit. Refer to Installation and Service Instructions Section: Replacement of Parts.
8. Re-assemble the burner and inner casing.
9. Turn on the gas and electricity supplies and follow the commissioning procedure to confirm gas soundness and correct boiler operation.
10. **Check and adjust the setting pressures to the values in the table overleaf and adjust if necessary.** Refer to the Installation and Service Instructions Section: Replacement of Parts "To Set the Burner Pressure".
11. Refit the plastic sealing cap to the gas valve modulating valve adjuster and seal with a dab of paint or similar.
12. Turn off the boiler and when cool peel off the arrow from the data plate on the combustion chamber front panel and re-stick against the gas type for which the boiler has been converted and adjusted.
13. Replace the boiler front panel.

The conversion is now complete.

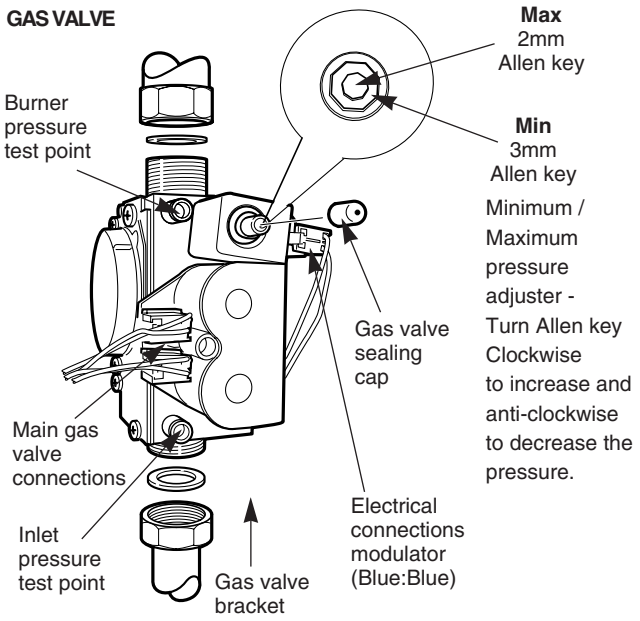

Burner Setting Pressures and Heat Inputs for Natural Gas

NOMINAL BOILER RATINGS (10 minutes after lighting)		BOILER ADJUSTED FOR G20 (Natural Gas)				
		24CDi RSF	28CDi RSF	35CDi II RSF	26CDi XTRA RSF	24CDi OF
INJECTOR SIZE MM Ø		4.3	4.5	5.4	4.5	4.5
MAX. INPUT DHW	kW	27.0	31.5	39.2	25.25	27.0
BURNER PRESSURE	mbar	14.8	15.5	13.5	11.7	13.2
MAX. INPUT CH	kW	27.0	27.0	30.1	25.25	27.0
BURNER PRESSURE	mbar	14.8	10.8	8	11.7	13.2
MIN. INPUT DHW	kW	11.4	11.4	11.9	7.5	10.4
BURNER PRESSURE	mbar	1.5	1.0	0.9	0.9	2.0

	PARTS LIST	
Quantity	Description	Part No.
1	Conversion Instructions LPG to NAT GAS	8 716 104 543
1	Burner Injectors: 4.3	8 716 105 033
1	4.5	8 716 140 208
1	5.4	8 716 104 457
1	Gas Valve - Dungs BM177 SLO 40	8 716 102 637
1	Bracket	8 716 100 007
1	Copper Washer	8 716 101 994

WORCESTER

CONVERSION INSTRUCTIONS FOR 24CDi OF, 24CDi RSF, 28CDi RSF, 26CDi XTRA & 35CDi II RSF Combi

THESE INSTRUCTIONS SHOULD BE USED IN CONJUNCTION WITH THE MAIN INSTALLATION INSTRUCTIONS WHEN CONVERTING APPLIANCES FROM NATURAL GAS TO LPG

ONLY COMPONENTS SUPPLIED BY WORCESTER HEAT SYSTEMS SHOULD BE USED

ONLY COMPETENT PERSONNEL SHOULD ATTEMPT THE CONVERSION

CONVERSION FROM NATURAL GAS TO LPG SHOULD NOT BE CARRIED OUT ON APPLIANCES INSTALLED IN A ROOM OR INTERAL SPACE BELOW GROUND LEVEL

1. Ensure the gas service cock is turned **OFF** and the electrical supply is **ISOLATED**.
2. Refer to the Servicing Instructions to remove the cabinet front panel and inner casing.
3. Follow the dismantling instructions to remove the burner. Refer to Installation and Service Instructions Section: Inspection and Servicing.
4. Remove the injector and replace with the relevant injector from the kit. Refer to Installation and Service Instructions Section: Inspection and Servicing.
5. Remove the nut, end cap and bracket at the opposite end of the burner and insert the gauze from the kit.
6. Refit the end cap ensuring that the support bracket is in the correct orientation.
7. Remove the gas valve and replace with the gas valve supplied in the kit. Refer to Installation and Service Instructions Section: Replacement of Parts.
8. Re-assemble the burner and inner casing.
9. Turn on the gas and electricity supplies and follow the commissioning procedure to confirm gas soundness and correct boiler operation.
10. **Check and adjust the setting pressures to the values in the table overleaf and adjust if necessary.** Refer to the Installation and Service Instructions Section: Replacement of Parts "To Set the Burner Pressure".
11. Refit the plastic sealing cap to the gas valve modulating valve adjuster and seal with a dab of paint or similar.
12. Turn off the boiler and when cool peel off the arrow from the data plate on the combustion chamber front panel and re-stick against the gas type for which the boiler has been converted and adjusted.
13. Replace the boiler front panel.

The conversion is now complete.

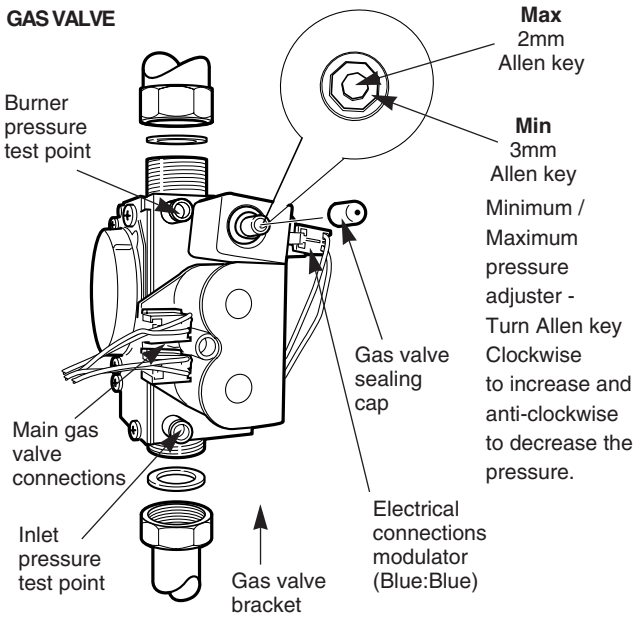

Burner Setting Pressures and Heat Inputs for LPG

NOMINAL BOILER RATINGS (10 minutes after lighting)		BOILER ADJUSTED FOR G31 (Propane)				
		24CDi RSF	28CDi RSF	35CDi II RSF	26CDi XTRA RSF	24CDi OF
INJECTOR SIZE MM Ø		2.78	3.1	3.4	2.7	2.78
MAX. INPUT DHW	kW	27.0	31.5	39.2	25.25	27
BURNER PRESSURE	mbar	35.5	35.5	34.7	35.5	35.5
MAX. INPUT CH	kW	27.0	27.0	30.1	25.25	27.0
BURNER PRESSURE	mbar	35.5	24.3	21.3	35.5	35.5
MIN. INPUT	kW	11.4	11.4	11.9	7.5	10.4
BURNER PRESSURE	mbar	5.4	3.8	3.1	2.9	5.5

	PARTS LIST	
Quantity	Description	Part No.
1	Conversion Instructions NAT GAS to LPG	8 716 104 911
1	Burner Injectors: 3.1	8 716 140 222
1	2.78	8 716 140 209
1	3.4	8 716 104 458
1	2.7	8 716 156 373
1	Burner Gauze	8 716 142 601
1	Gas Valve - Dungs BM177 SLO 40	8 716 102 868
1	Bracket	8 716 100 007
1	Copper Washer	8 716 101 994

WORCESTER

Bosch Group

INSTALLATION INSTRUCTIONS FOR THE OPTIONAL FILLING KIT

WORCESTER 24CDi, 28CDi, 26CDi XTRA, 35CDi and BOSCH RX2

1. Install the appliance manifold in the desired position and connect all pipework. (See installation instructions packed with the appliance
2. Secure the filling device as shown in the diagram below using the retainers and M6 hexagonal headed screws supplied in the kit, ensuring that the manifold "O" rings are fitted correctly, clean and lubricated.
3. Ensure that all isolating valves on the manifold are closed and then open the valve on the flow connection only.
4. Open the valve on the cold water inlet and fill the system until the desired pressure is reached. (N.B.: A 3 bar maximum pressure relief valve is fitted to the filling device).
5. Close the cold water valve when the system is full and, after ensuring that all other valves are closed, remove the filling device.

   The system may now be left full or drained as required.

8 716 145 054 Issue 2 0799

WORCESTER

Bosch Group

FITTING AND OPERATING INSTRUCTIONS FOR DIGISTAT PROGRAMMABLE 24 HOUR ROOM THERMOSTAT SYSTEM

General information is given in the users instruction leaflet despatched with the appliance and/or on the lighting instruction plate fitted to the appliance.

LARGE RECEIVER

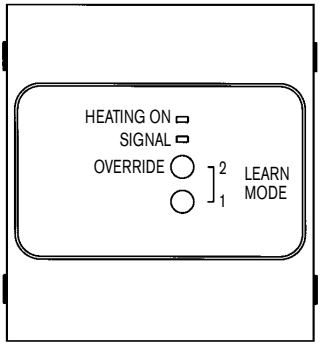

TRANSMITTER

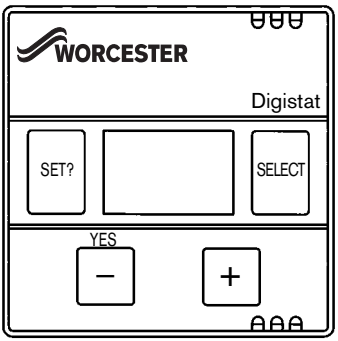

SMALL RECEIVER

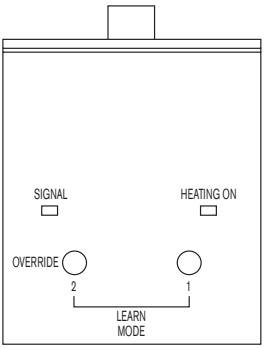

CONFORMS TO THE ESSENTIAL REQUIREMENTS OF THE FOLLOWING DIRECTIVES:
89/336/EEC – ELECTROMAGNETIC COMPATIBILITY
73/23/EEC – LOW VOLTAGE DIRECTIVE

CE

THESE INSTRUCTIONS APPLY IN THE UK ONLY

THESE INSTRUCTIONS ARE TO BE LEFT WITH THE USER OR AT THE APPLIANCE

Gas Safety (Installation and Use) Regulations 1988: All gas appliances must be installed by a competent person, in accordance with the above regulations. Failure to install the appliance correctly could lead to prosecution. the manufacturers notes must not be taken, in any way, as overriding statutory obligations.

IMPORTANT: Read these instruction carefully in order to get the best from your appliance.

WARNING: This appliance must be earthed and protected by a 3A fuse if a 13A plug is used, or, if any other type of plug is used, by a 5A fuse either in the plug or adaptor or at the distribution board.

NOTE: The radio signal transmitter used in the Digistat conforms to DTI standard and is licence exempt.

TO FIT THE RECEIVER

WARNING: Switch off the power supply before starting work.

If the facia blanking plate is of the type with a lug at the top, release the plate by gently pulling the lug and withdraw it from the front of the facia.

Otherwise, lower the control panel as described in the instruction book.

Remove the facia cover plate by releasing the clips at the rear right-hand side and withdraw it from the front.

Present the receiver to the facia and plug in the programmer connector into the four-way connection on the board (Fig. 1).

Push the receiver into position ensuring that the lead is not trapped and that the clips have properly engaged.

Refit the control panel before switching on the power supply.

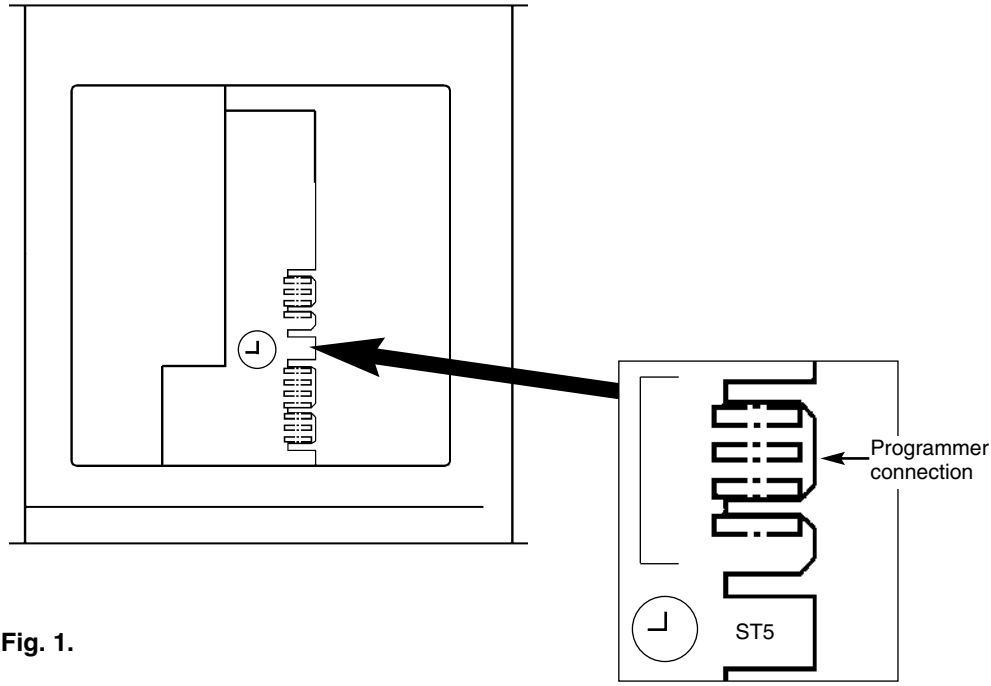

Fig. 1.

COMMISSIONING THE DIGISTAT AND RECEIVER

1. Turn on the power to the appliance/receiver.
2. Push the "override" button on the receiver once. The green LED should come on and the appliance should run in central heating mode.
3. To enter the "learn" mode push (and hold) the button marked **1** followed by the button marked **2** (OVERRIDE) and hold both depressed together. The red LED should flash for two seconds then go out signifying that the receiver is in learn mode. Release both buttons.
4. The red and green LED's should now both be on.
5. Take the Digistat **(no closer than one meter from receiver.)**
6. Slide down the right hand battery drawer of the Digistat, remove the plastic insulator strip and slide drawer back into place.
7. Repeat the same procedure with the left hand battery drawer. The procedure on the right hand drawer must be carried out first.
8. As soon as both battery compartments are slid back into place, the red LED on the receiver should flash for 7 seconds and then go out. The green LED may be ON or OFF depending on the room temperature at the time of commissioning.
9. The Digistat should now display the actual room temperature and the time at 12.00 am midnight. If the unit has been stored in a cold place, it may take time to warm up.
10. If the red LED remains on, slide down both battery drawers on the Digistat, check the battery positions are correct, and once the display has faded, repeat steps 6 to 9.
11. Increase the "SET" temperature on the Digistat by pressing the "+" button until a flame symbol appears, in the left hand segment of the display.
12. The red LED on the receiver should flash for 7 seconds. This confirms that the radio signal is being sent and received. After 7 seconds the red LED should go out and the green one come on.
13. Check that the appliance is running in central heating mode.
14. Decrease the "SET" temperature on the Digistat by pressing the "–" button until the flame symbol disappears.
15. The red LED on the receiver should flash for 7 seconds. After the 7 seconds both the red and green LED's should go out. Check that the appliance has switched off.
16. The Digistat can now be secured to the wall in the desired position.

During normal operation the red LED on the receiver will flash for 7 seconds each time a radio signal is received from the Digistat. This will occur approximately every 5 minutes.

The green LED on the receiver denotes a call for heat (ON).

Once the system has been successfully commissioned, buttons 1 and 2 on the receiver should not be pressed simultaneously, unless a replacement Digistat or receiver is fitted.

INSTALLING THE DIGISTAT

WARNING:
ISOLATE MAINS SUPPLY BEFORE REMOVING ANY EXISTING THERMOSTATS

IMPORTANT

The Digistat is a battery powered (Four type AA 1.5V **alkaline** cells, supplied, and replacement must be of the same type) wireless unit, using radio signal technology and DOES NOT require any electrical connections. If the Digistat is being used to replace an existing hard wired thermostat, the wiring to the old thermostat must be made electrically safe and isolated, as it is no longer required.

LOCATION

Care should be taken to mount the Digistat in a position which is not subjected to direct sunlight or draughts. Preferably it should be mounted on an inside wall, about 1.5m (5ft) above the floor, in a position where it can respond to room temperature but away from the direct influence of radiators or other appliances giving off heat. Minimum wall plate clearances are shown in Fig. 2. It is advisable to carry out the commissioning procedure BEFORE fixing the wallplate, to ensure your chosen location is suitable for transmitting and receiving radio signals. The range of the radio signal is typically 30m, typical house walls have no effect on the signal.

FIXING

1. Loosen the securing screw on the bottom of the Digistat and remove the wallplate.
2. Fix the wallplate with securing screw at the bottom directly onto a flat wall. The wall plugs and screws provided must be used. Minimum wall plate clearances are given below (Fig. 2).
3. **Note:** The Digistat comes pre-set with a temperature range of 5°C to 30°C. If you wish to select the optional range of 16°C to 30°C remove the selector link at the rear of the unit.
4. Plug the Digistat onto the wallplate and tighten the securing screw. DO NOT remove the plastic strips from the battery drawers until you are ready to carry out the commissioning.

Fig. 2.

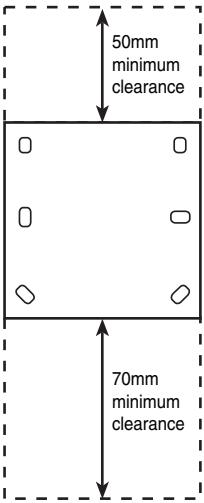

MAINTENANCE

No maintenance is required for the Digistat, apart from battery replacement (Four type AA 1.5V **alkaline** cells, rechargeable batteries must not be used)

PROGRAMMER & OPERATING INSTRUCTIONS

Once the system has been commissioned, the unit will display the actual room temperature and the time at somewhere after 12.00 am (midnight).

Digistat has an indicator to show when the heating system is ON or OFF, for example if the SET temperature is 20°C and the actual temperature is below 20°C a flame symbol will appear on the display (Fig. 3).This indicates a demand for heat (system will switch ON).

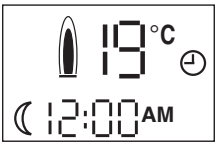

Figure 3

During normal operation, the Digistat will display actual room temperature continuously.

Digistat is supplied with a pre-set programme shown below which can be easily changed to suit your requirements:

Table 1

FACTORY PRE-SET PROGRAMMES

Setting		Time	Temperature
①	Day 1	6.30 am	21°C
②	Day 2	8.30 am	16°C
③	Day 3	4.30 pm	21°C
☾		Night	10.30 pm

*** 16°C if selector pin removed see INSTALLING THE Digistat**

GENERAL

Digistat uses a question and answer routine to simplify programming. When the "SET" button is first pressed, the Digistat display will be as Fig. 4 indicating "SET CLOCK?". Pressing "SET" again displays Fig. 6, indicating "SET PROGRAMME?".

Figure 4

If you want to enter either of the setting modes to make changes, simply press the "YES" (–) button in answer to the relevant question. If the programme item displayed is not the one you wish to change, continue pressing "SET" until the desired option appears.

Figure 5

TO SET THE CLOCK

Press the "SET" button once. The clock symbol ◷ will flash and the word SET? will be displayed (Fig. 4).

Pressing the "YES" (–) button once will display the current time, with the hours flashing (Fig. 5). Use the "+" and "–" buttons to set the correct hour. Press the "SET" button again and the minutes will flash. Use the "+" and "–" buttons to set the correct time to the nearest minute.

Figure 6

TO VIEW OR CHANGE THE PRE-PROGRAMMED TIMES AND TEMPERATURES

Figure 7

Press the “SET” button until the display shows the “Programme Set” symbols (Fig. 6.)

Press the "YES" (–) button once and the display shows the first programmed time and temperature with the temperature flashing (Fig. 7).

If you only wish to view the settings, continue to press “SET” until the Digistat returns to normal operating mode. Use the SET button to advance through the other times and temperatures. To alter any of the four times or temperature, press the "+" or "–" button when the time or temperature you wish to alter is flashing, i.e. changes made when the display is flashing as in Figure 8 would alter the fourth, or night switching time.

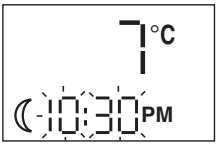

Figure 8

It is possible to programme any of the switch periods as “OFF”, by pressing the “–” button when in “temperature set” mode and reducing the temperature below 5°C until the display reads “– –°C”. This can be achieved in steps or by holding the " –" button which will give a continuous run down. Once all times and temperatures have been programmed press “SET” one final time to return the Digistat to normal operating mode.

OPERATING MODES

The Digistat can be operated in one of three modes.

1) – Normal Running (all pre-set times and temperatures)

2) – Continuous night temperature (useful for low limit temperature protection when on holiday)

3) – Continuous “DAY 1” preset temperature

Use the “SELECT” button to change the operating mode to suit your requirements, The symbols are positioned on the right hand side of the display.

TEMPERATURE OVERRIDE

If at anytime during normal operation, you wish to increase or decrease the set temperature simply use the “+” or “–” buttons to change to your desired setting. 5 seconds after releasing the “+” or “–” button the display will revert to showing the actual room temperature. The Digistat will now control the temperature to the override setting until the next programmed switching time, when it will revert to the times and temperatures you have already programmed.

NOTE: If the next programmed temperature setting is the same as the present programmed setting, the override temperature will remain in force.

ADDITIONAL INFORMATION

IMPORTANT: ENSURE THAT THE COMMISSIONING PROCEDURE HAS BEEN CARRIED OUT AS DESCRIBED ABOVE.

NORMAL OPERATING MODE

Once the Digistat system has been commissioned, there should be little need for any user interface with the receiver.

During normal operation the red and green LED's will occasionally be on, and these signify the following:

GREEN LED

The green LED will be on when there is a demand for heating, and off when there is no demand.

RED LED

The red LED will flash for 7 seconds, approximately every 5 minutes. This denotes that a radio signal is being received from the Digistat unit.

SITUATIONS REQUIRING ATTENTION

RED LED CONTINUALLY FLASHING

This denotes that the batteries in the Digistat unit are approaching the end of their life (see **Battery replacement**).

RED LED CONTINUALLY ON

This denotes that the receiver has been unable to receive a radio signal from the Digistat unit. This may be caused by the batteries being dead (see **Battery replacement**) or some temporary interference with the radio signal.

To re-send and test the signal, go to the Digistat unit. If the flame signal is visible on the display, press the "–" button until it disappears. If the flame symbol is not visible, press the "+" button until it appears. If the radio signal has been successfully transmitted and received, the red LED will flash for seven seconds then go off. If the red LED is still on, "learn mode" may have been selected by accident. To correct, open both Digistat battery drawers and wait for the display to fade, close the right hand drawer followed by the left and re-programme the Digistat with your desired time and temperature settings.

If the red LED is still on, there may be a poor batery connection inside a drawer (perhaps due to a leaking battery). Clean contacts. If problem is not solved the fault will require the attention of a heating engineer/electrician.

MANUAL OVERRIDE

In a fault situation, the heating can be manually switched on and off by using the "OVERRIDE" button on the receiver, even though the red LED will stay on until a satisfactory signal is reinstated.

Once the receiver receives a satisfactory signal again, it will automatically reset itself for normal operation.

BATTERY REPLACEMENT

Thirty days before the batteries need replacing, a battery symbol will flash in the right hand side of the display. (Fig. 9). This signifies that 4 x 1.5v type AA **alkaline** batteries will be needed to replace the old ones. If battery replacement is carried out in this condition the settings will only be held in the memory for a maximum of one minute, after which reprogramming may be necessary.

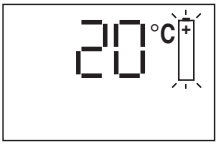

Figure 9

Important

To avoid the possibility of having to reprogramme the switching times and temperatures, it is advisable to wait until the flashing battery display changes to a continuous battery only display (after 30 days). (Fig. 10).

In this condition the unit will be OFF but your programmed settings will be held in the memory for a number of weeks. The battery compartment can now be left opened, to replace the batteries for approximately one hour. If the compartment is left opened for longer the unit will revert to the factory preset times and temperatures. It may be necessary to reset the correct time of day after changing the batteries.

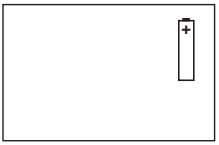

Figure 10

The battery compartment is situated at the bottom of the unit (press to unlatch and slide down). Ensure new batteries are positioned correctly. Close right hand compartment first.

HELPFUL HINTS

1. FIRST/LAST SET TIMES

The Day 1 setting cannot be programmed before 12.00 am. The night setting can be programmed at whatever time you require, even after 12.00 am (midnight) so long as it is not more than 23 hours 50 minutes after the Day 1 setting.

2. PART OR FULL DAY OMISSION

If during programming the Digistat one of the symbols on the left hand side of the screen starts to flash, this indicates that two or more of the switching times have been set to the same time. This facility enables you to omit one or more of the switching periods. When one or more of the switching times are programmed together the later setting takes precedent. For example, if all four switching times were set together the Digistat would control continuously at the fourth (night) temperature setting .

3. PROGRAMME SEQUENCE

The Digistat will not allow you to program the switched periods out of sequence but will hold the times together as stated above.

4. RESET

If at any time during the programming you get confused and would like to start the procedure from the beginning press the “SELECT” and “–” buttons at the same time and hold for two seconds. this resets the Digistat to the factory pre-set times and temperatures (Table 1).

5. SELF REVERT

If during programming no button is pressed for between 1 and 2 minutes the Digistat will revert automatically to its normal operating mode.

HOT WATER SUPPLY

Hot water is available whenever a tap or shower is turned on. The supply of hot water takes priority over the delivery of heat to the central heating system for the period that the hot water is required.

TEMPERATURE CONTROL

The central heating water temperature is controlled by the centre knob on the facia.

The domestic hot water temperature is controlled by the right hand knob on the facia up to a pre-set maximum.

REPLACEMENT PARTS

The receiver and Digistat are available separately for replacements or as a complete system.

G.C. No.	Part	WHS Part No.
E01-051	Transmitter – Digistat	7 716 192 004 0
E01-052	Receiver – Digistat (Large)	7 716 192 005 0
E89-870	Receiver – Digistat (Small)	8 716 105 129 0

NOTE. If the transmitter (004) or large receiver (005) require replacement, it is necessary to check the rear of the unit for 'Issue 2' identification. If this is **NOT** found then a new (006) system must be ordered as follows:

G.C. No.	Part	WHS Part No.
E01-053	Digistat Wireless System	7 716 192 006 0

Worcester Heat Systems Ltd. (Bosch Group), Cotswold Way, Warndon, Worcester WR4 9SW.
Telephone: 01905 754624. Fax: 01905 754619. Technical Helpline 08705 266241.
www.worcester-bosch.co.uk

PUBLICATION 8 716 145 055f 08/02

06490021001

WORCESTER

Bosch Group

DIGITAL SINGLE-CHANNEL PROGRAMMER

FITTING AND OPERATING INSTRUCTIONS

General information is given in the users instruction leaflet despatched with the appliance and/or on the lighting instruction plate fitted to the appliance.

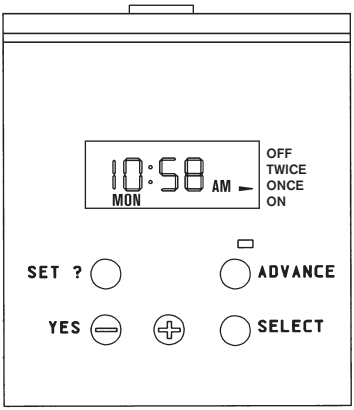

CONFORMS TO THE ESSENTIAL REQUIREMENTS OF THE FOLLOWING DIRECTIVES:
89/336/EEC - Electromagnetic compatibility
73/23/EEC - Low voltage Directive

CE

THESE INSTRUCTIONS APPLY IN THE UK ONLY

THESE INSTRUCTIONS ARE TO BE LEFT WITH THE USER OR AT THE APPLIANCE

Gas Safety (Installation and Use) Regulations 1984 : All gas appliances must be installed by a competent person, in accordance with the above regulations. Failure to install the appliance correctly could lead to prosecution. The manufacturers notes must not be taken, in any way, as overriding statutory obligations.

IMPORTANT: Read these instructions carefully in order to get the best from your appliance.

WARNING: This appliance must be earthed and protected by a 3A fuse if a 13A plug is used, or, if any other type of plug is used, by a 5A fuse either in the plug or adaptor or at the distribution board.

PROGRAMMER

7 day single channel timeswitch. User maintenance is not possible.

CONTROL

One or Two ON and OFF periods can be chosen per day.

Programme times are set within a 23 hour 50 minute period.

POWER UP CONDITION

On power up, when the battery back-up has not been operational, the pre-set programme times will be in force:

	ON1	OFF1	ON2	OFF2
MON - FRI	6.30AM	8.30AM	4.30PM	10.30PM
SAT - SUN	7.00AM	9.00AM	4.00PM	11.00PM

To return the programmer to the standard programme and 12.00am MON press the SET and + buttons together.

BATTERY BACK-UP

Lifetime Lithium battery giving:

Display: 1 Hour min, 2 hour max every power loss.

Timekeeping: 7 hour min, 8 hour max every power loss.

Programme: 1.5 year min, 10 year typical.

TO FIT THE PROGRAMMER

WARNING: Switch off the power supply before starting work.

Remove the facia cover plate by releasing the clip at the top and withdraw it from the front.

Present the programmer to the facia and plug in the programmer connector into the four-way connection on the board. (Fig. 1).

Push the programmer into position ensuring that the lead is not trapped and that the clip has been properly engaged.

Switch on the power supply.

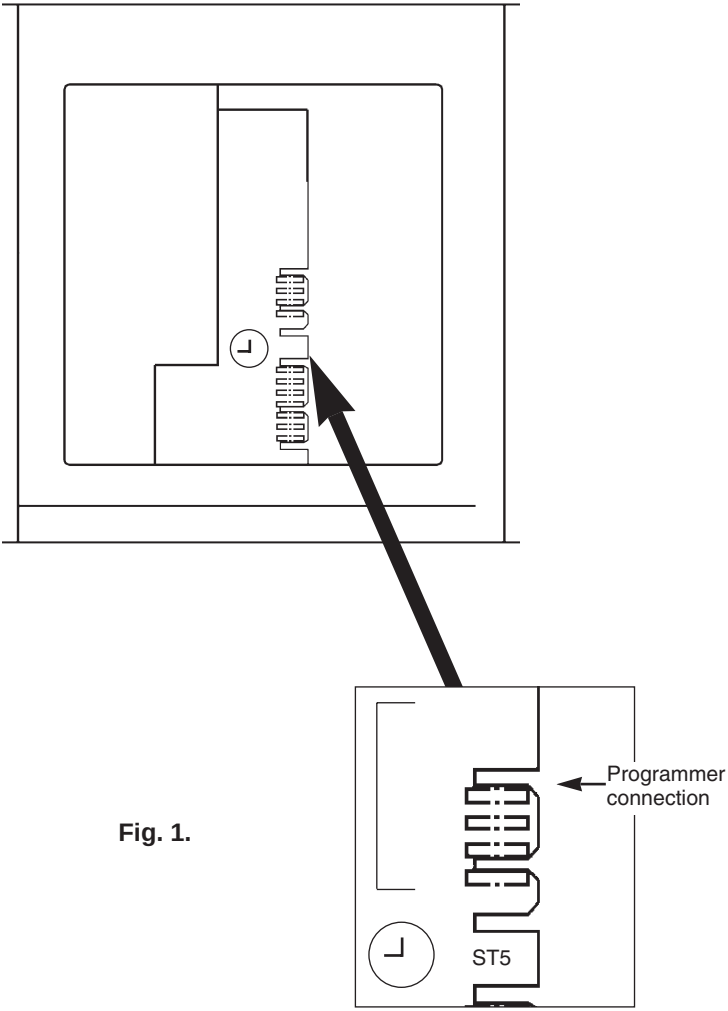

Fig. 1.

TO REPLACE THE PROGRAMMER
Follow the preceding instructions.

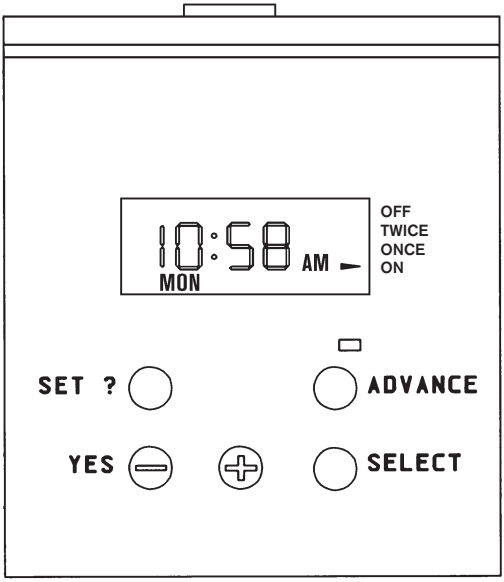
10:58
MON
AM
OFF
TWICE
ONCE
ON
SET ?
ADVANCE
YES
SELECT

PROGRAMMER OPERATING INSTRUCTIONS

The programmer controls the operation of the central heating circuit. The domestic hot water is permanently available upon demand and will take priority over the supply of heat to the system during the demand.

Pressing the **SET** button repeatedly progresses you through the settings. To reset at any point the **YES** button must be pressed, followed by the **+** and – buttons as necessary.

NOTE: The – button is also the **YES** button.

Check that the gas supply to the appliance is **OFF** and that the room thermostat, if fitted, is at minimum to prevent the accidental operation of the appliance during the initial setting of the programmer. It is not necessary to do this when making adjustments to the programmer at a later date. Check that all taps and showers are shut.

Switch on the power supply.

TO SET THE CLOCK

Starting with the display showing the time of day press **SET**.

The display will ask **SET CLOCK ?**. If the clock display is not correct, press **YES**.

The display will show the current time and day with the day flashing.

Use the **+** and – buttons to change to the correct day. Press **SET** to lock in the day.

The display will show the hours flashing. Use the **+** and – buttons to set the hours (remember to take into account **AM** or **PM**), press **SET** to lock in the hours.

Repeat the actions to set the minutes.

The display will show **SET PROG?**.

TO SET THE PROGRAMME

If you wish to change the programme press **YES** otherwise press **SET** twice to return to the run mode with the standard programme.

If you pressed **YES** then the display will ask **SET MON-FRI PROG?**

If you want the weekday times to be the same press **YES**.

If you require a different time for each day press **SET** to access each day separately.

If you pressed **YES** then the display will show the first **ON** time for **MON-FRI**. Use the **+** and – buttons to change the time as necessary.

Press **SET** to access the first **OFF** time.

Use the **SET** and **+** and – buttons to go through the programme and change as necessary.

When you press **SET** after the second **OFF** the display will ask **SET MON PROG?**.

If you wish set or modify the **MON** times use the **YES** button to access the times and the **SET**, **+** and – buttons to change as necessary.

You can access each day in turn by pressing the **SET** button and only if you wish to change anything should you press the **YES** button followed by the **+** and – buttons.

After Friday you have the chance to set **SAT** and **SUN** the same after which they are accessed individually.

Pressing **SET** after the display **SET SUN PROG?** or the last **SUN** off time will show **TEST?** on the display.

TO TEST THE PROGRAMME

The test feature enables you to quickly run through the programme which has been set and check that all is correct with both the programme and the system.

Pressing the **YES** button in response to **TEST?** selects the test mode.

Pressing and holding down the **YES** button starts the clock fast running until it reaches the first switching time when the output changes and the display halts to show the time of switching and the output state.

If you continue to hold down the **YES** button the display will continue to fast run, after a few seconds, until the next switching time.

If you stop pressing the **YES** button the unit will stay in that mode until the **YES** button is pressed again.

In this way you can run through the days programme or, if you hold down the **YES** button, the whole weeks programme.

Pressing the **SET** button, at any time, returns the unit to the normal run mode.

OPERATIONAL NOTES

Switching:
The switching options for the central heating are

OFF	Off all the time
TWICE	On for two periods each day
ONCE	On for one period each day (**ON1** to **OFF2**)
ON	On all the time.

Operation of the **SELECT** button moves the arrow to the option required.

Mixing Once or Twice Options:
To have the Central Heating twice on some days and once on others, programme the twice days as normal. For the other days set **ON1** and then **OFF1**, **ON2** and **OFF2** at the desired off time. Set the **SELECT** button to **TWICE**.

One Day Off:
If you want the appliance to be off on a particular day, set the relevant **ON1** and **OFF1** to the same time and the **ON2** and **OFF2** to the same time later in the day. Set the **SELECT** button to **ONCE** or **TWICE**.

Central Heating Shutdown:
Set the **SELECT** button to **OFF**. This does not affect the programme.

Advance:
Advance is only operational in the **ONCE** or **TWICE** modes and is cancelled at the next programme time.

Hot Water Supply:
Hot water is available whenever a tap or shower is turned on. The supply of hot water takes priority over the delivery of heat to the central heating system for the period that the hot water is required.

Temperature Control:
The **Central Heating** water temperature is controlled by the centre knob on the facia.
The Domestic Hot Water Temperature is controlled by the right hand knob on the facia.
Standard Programme:
To return to the standard programme press the **SELECT** and **+** buttons together.

TO LIGHT AND STOP THE APPLIANCE

Refer to the User operating instruction leaflet or the lighting instruction plate on the appliance.

WORCESTER
Bosch Group

Worcester Heat Systems Ltd. (Bosch Group), Cotswold Way, Warndon, Worcester WR4 9SW.
Telephone: 01905 754624. Fax: 01905 754619.
Technical Helpline 08705 266241
www.worcester-bosch.co.uk

PUBLICATION 8 716 145 227b 02/02

WORCESTER

WALL SPACING FRAME FOR 35CDi II

THESE INSTRUCTIONS SHOULD BE USED ALONGSIDE THE INSTALLATION AND SERVICING INSTRUCTIONS SUPPLIED WITH THE APPLIANCE

ONLY COMPETENT PERSONNEL SHOULD ATTEMPT INSTALLATION

Gas Safety (Installations and Use) Regulations 1998: It is the law that all appliances are installed by a competent person in accordance with the above regulations. Failure to install appliances correctly could lead to prosecution. The maufacturers notes must not be taken in any way as over-riding statutory obligations.

ONLY COMPONENTS SUPPLIED BY WORCESTER HEAT SYSTEMS SHOULD BE USED

WARNING: This appliance must be earthed and protected by a 3A fuse. It must be possible to fully isolate the appliance.

Pack Contents

Quantity	Description	Part No.
2	Frame Sides	8 716 101 071
1	Top Bracket	8 716 103 253
12	M6 x 16mm Set Screw	2 911 131 197
12	M6 Hex Nut	2 915 011 007
1	2½ x 12 Wood Screw	8 716 155 026
1	Washer ¼ x ¾ x 16	2 916 011 884
1	Plastic Plug 10mm	8 716 155 054
1	Spacer	8 716 101 375
2	Wall Spacer Extension	8 716 103 254

ASSEMBLING THE FRAME (see Fig. 1.)
Assemble the two side pieces to the top bracket using two of the M6 nuts and set screws ensuring that the three holes in the top bracket face forwards. (The two sides are not handed)

Fasten the two side spacing brackets to the manifold assembly as shown and then fasten the whole assembly to the spacing frame using the remainder of the M6 nuts and set screws provided.

FITTING THE FRAME TO THE WALL (see Fig. 2.)
Check that the position chosen for the appliance is in accordance with the recommendations given in the installation and servicing instructions supplied with the appliance.

Holding the frame assembly to the wall check that it is level and in the desired position and mark the position of the six fixing holes through the side pieces and the position for the central spacer in the top bracket.
Draw a horizontal line to mark the top of the frame and a vertical line to mark the centre of the frame using the central hole already marked for the top bracket spacer as a guide.

REAR FLUE: Measure 107mm up from the top edge of the frame along the vertical line and this is then the centre of the hole for the flue duct.

SIDE FLUE: Extend the horizontal line of the top of the frame along the chosen wall into the corner and then continue around the corner for 232mm and this is then the centre of the flue duct.

Drill the six fixing holes 60mm deep for No.12 size plugs. Cut the flue duct hole 110mm diameter (150mm for internal fitting) ensuring that the hole is horizontal through the wall.

Fix the frame to the wall ensuring that it is level before tightening the screws.

Refer to the Installation and Servicing Instructions supplied with the appliance to complete installation.

EXTERNAL FITTING OF THE DUCT ASSEMBLY

REAR FLUE: When the lengths are calculated for the air and flue ducts, an extra 34mm needs to be added to the length calculated.

SIDE FLUE: No change is necessary to the calculated flue length.

Fig. 1.

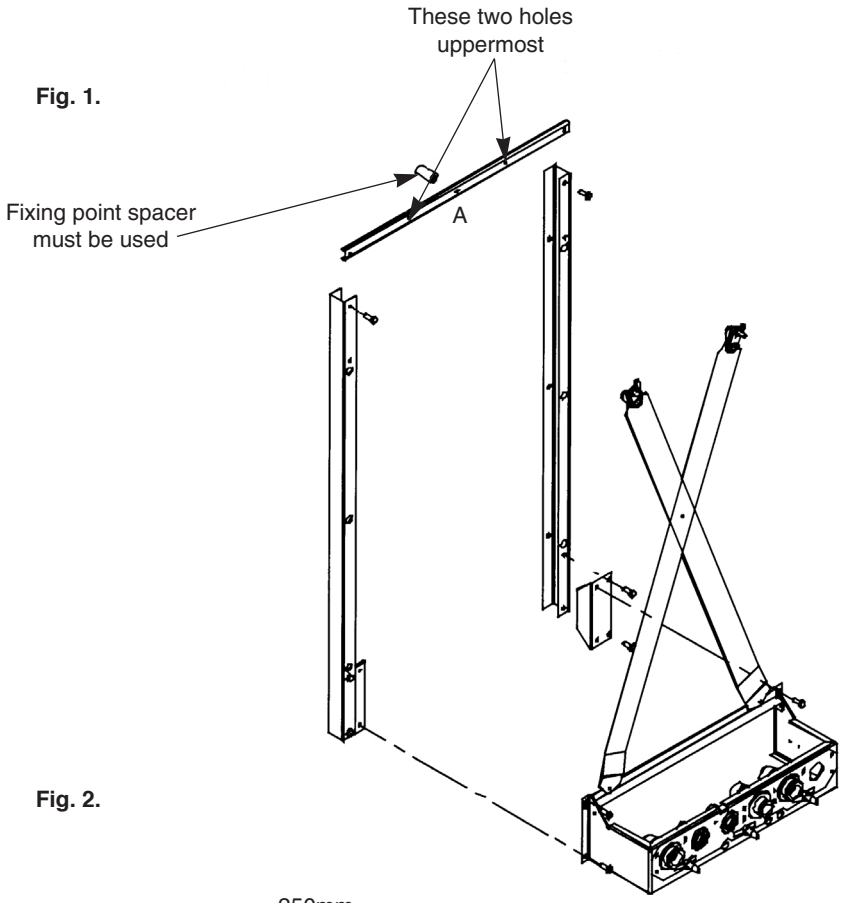
These two holes
uppermost
Fixing point spacer
must be used
A

Fig. 2.

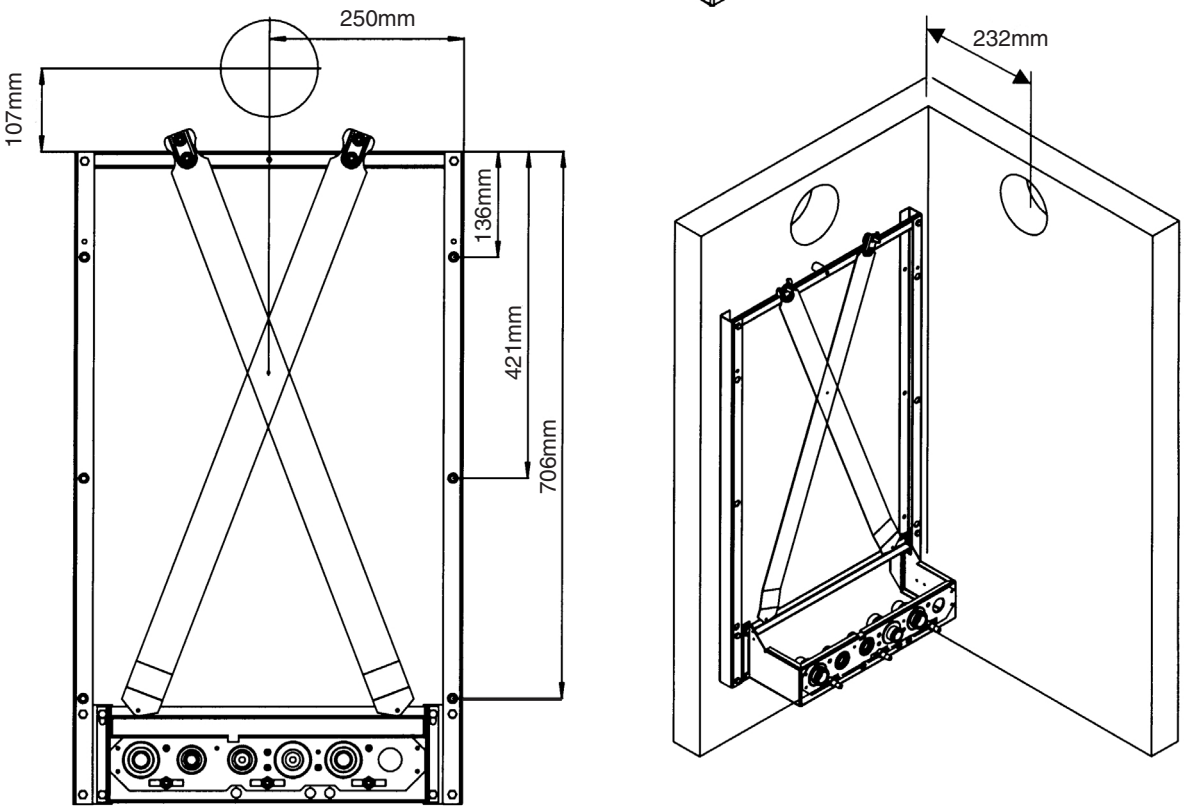
250mm
107mm
136mm
421mm
706mm
232mm